TBM

Comprehensive Guide

2014 Edition

TBM 900

A new TBM. Ahead of the firewall, everything is new: a redesigned cowling with more efficient inlet, a simplified plenum to improve airflow, easy nozzle access, inertial separator up to VMO and more. Everything is new... except the engine. The TBM 900 is still powered by the industry standard PT6A, but with all the other improvements, you get the equivalent of 80 more horsepower without increasing fuel consumption. And thanks to the new torque limiter, you can use all 850 horses right from takeoff.

When you add this to Hartzell's new composite five-blade propeller, the TBM 900's sea-level standard takeoff distance improves by more than 20%. Time to climb to its service ceiling of FL310 is an impressive 18 minutes, getting you to your cruise altitude and en route faster than ever.

330kts

330 kts, the maximum cruise speed of the new TBM 900. Plus, the new TBM 900 is faster at its maximum cruise altitude of FL310. The TBM 900 simply gets you there faster, by reinventing the world's fastest certified single-engine turboprop.

2ft

The new 2-foot high wingtips will immediately become the signature of the TBM 900. Coupled with aerodynamic improvements to the ailerons, vertical stabilizer and new inner gear doors, these winglets significantly reduce drag while improving handling at low speeds and high angles of attack.

1,730 NM

1,730 Nautical Miles, the range of the TBM 900 at long-range cruising speed with 4 people. The TBM 900 can fly 130 NM further than its predecessor using the same amount of fuel.

If you want to travel 1,585 NM and get there almost an hour earlier, you can do by flying almost 40 kts faster in the TBM 900... Now that's efficiency!

G1000

Garmin G1000 Avionics – The TBM 900 retains the Garmin G1000 system that has proven so popular with TBM pilots.

The G1000 puts a wealth of flight-critical data at your fingertips. Its glass flight deckpresents flight, navigation and weather information – with the new GWX70 Doppler-capable radar, terrain, traffic and engine data on large, high-resolution displays.

The G1000 system also includes the GFC 700, the first brand-new autopilot designed for the 21st century. The GFC 700 uses all data available to the G1000 to navigate, including the ability to maintain airspeed references and optimize performance over the entire envelope.

TBM 900s can be equipped with Garmin's SVT (Synthetic Vision Technology), to recreate a 3-D "virtual reality" environment on the pilot and copilot flight displays. This significantly improves pilot situational awareness in Instrument meteorological conditions and mountainous terrain.

1

Unique. The TBM 900 is the first single-engine turboprop to feature single lever control.

A single, ergonomically designed lever controls engine power, propeller and engine condition. Plus, a new electronic power system allows the TBM 900 to start almost twice as fast as its predecessor, and an automatic starter cutoff reduces pilot workload during startup.

The lower instrument panel has been redesigned to provide easier access to deicing, inertial separator and other controls as well as give pilots more leg room. Pressurization settings are now completely automatic.

The TBM 900 is the most ergonomically designed and easiest to fly TBM ever!


NOSE DOWN
NOSE UP
MAN OVRD
POWER
TAXI
REV
AIL TRIM
L
R
FEATHER
HI
IDLE
LO
CUT OFF
TO
LDG
FLAPS
OFF
CONTROL FROM

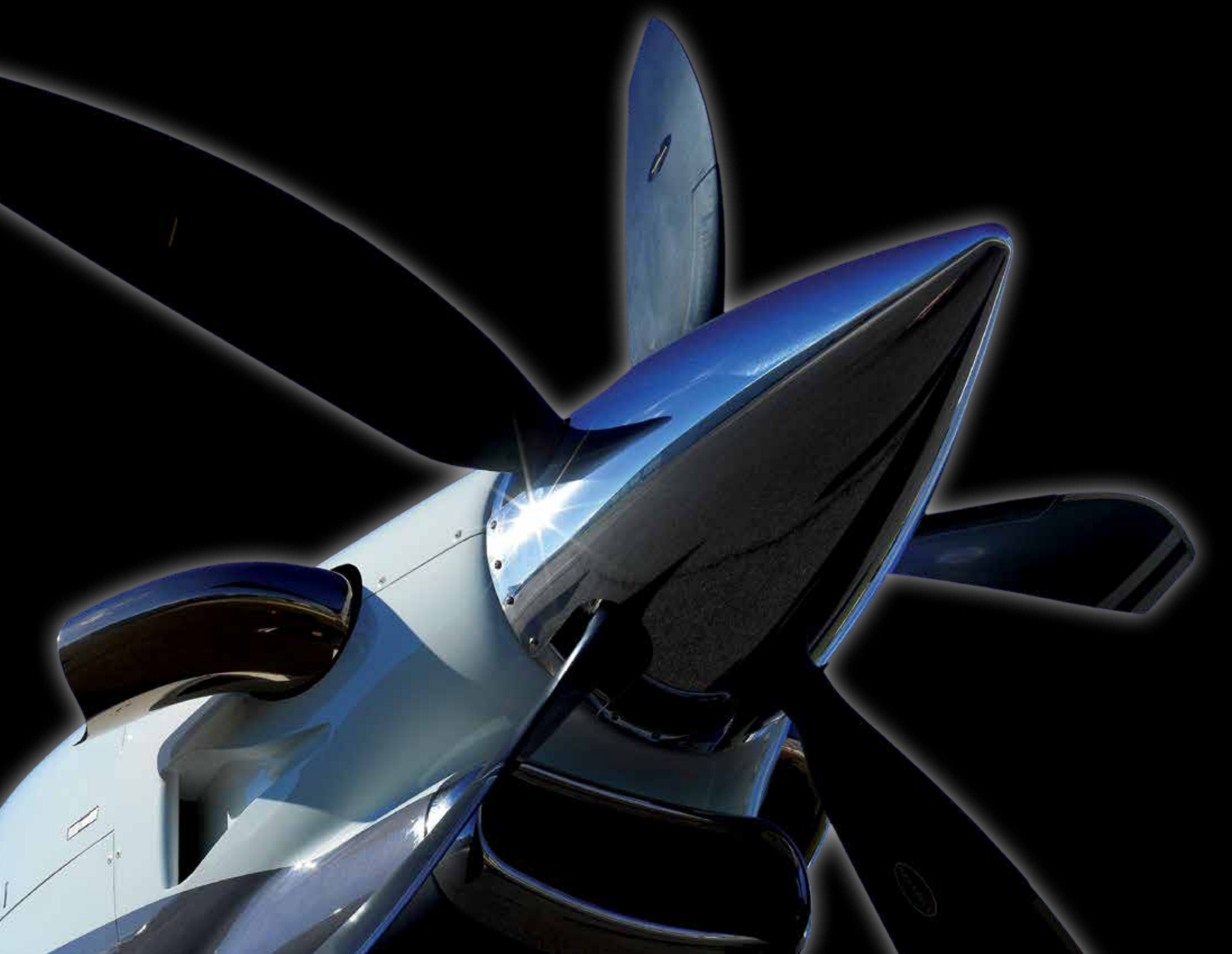

76.4dBA

At takeoff the TBM 900 generates only 76.4 decibels (dBA). Almost 3 db less than its predecessor, the TBM 900 meets the latest European and U.S. noise standards in the quiet category. Not only is the TBM 900 fun and exciting to fly, it's also eco-friendly!

507 lbs

The TBM 900's maximum baggage weight - 507 lbs (230 kg). The TBM 900 gives you the flexibility of an SUV while providing the performance of a sport car. You have the option of a standard "club" seating arrangement, or in just a few minutes the rear seats can be removed and the cabin converted into a 4-seat forward-facing configuration with an unrestricted baggage area capable of holding over 500 lbs of luggage, business supplies, skis, golf clubs and other equipment. The pilot door is standard and makes boarding easy.

No other aircraft in its class offers this flexibility. The TBM 900 adapts to your needs, not the other way around!

1.

TBM Overview

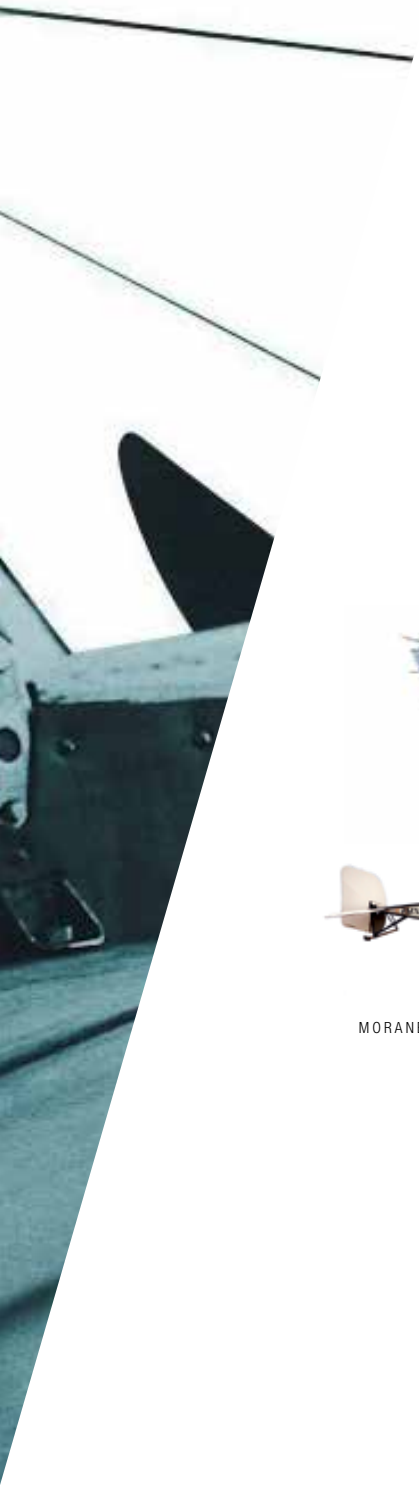

SOCATA TBM 900 - 2014

MORANE-SAULNIER PARIS - 1954

MORANE SAULNIER TYPE H - 1913

A CENTURY OF INNOVATION

The manufacturer of the TBM 900, DAHER-SOCATA, traces its roots to two companies with over a century of experience in innovation.

The DAHER Group started life in 1863 as a shipping company but has grown to become a billion dollar corporation providing services in the aerospace, defense and energy sectors while never losing sight of the concept of customer service. Today DAHER has over 7,500 employees in 12 countries around the world.

SOCATA, which joins the DAHER Group in 2009 to form DAHER-SOCATA, is heir to the company Morane-Saulnier founded in 1911 by the engineer Raymond Saulnier and the brothers Leon and Robert Morane. Morane-Saulnier was behind a number of firsts in the history of aviation, such as the first flight across the Mediterranean, by Roland Garros in 1913, and the first business jet, the MS 760 Paris from 1954. The Socata TBM 700 became the first pressurized single-engine turboprop to be certified, in 1990 and is the direct ancestor of the TBM 900.

With a history of 150 years of independence, DAHER is a company that is founded on strong principles and values, together with accountability to its stakeholders (customers, employees, suppliers, partners, etc.) that remain core to its strategy.


700
F-WTBM

TBM HISTORY

In 1990, the FAA and French DGAC (now a part of EASA) certified the world's first, fully-pressurized, single-engine, turboprop.

The TBM airframe design incorporated a variety of aluminum and steel alloys, titanium as well as advanced composite materials that came together in an airframe of unmatched structural strength and durability at the lowest possible weight and at an affordable cost.

The TBM from its inception employed a fail-safe airframe design including the use of multiple load paths, a crack-stopper band and the minimum practical number of access panels to maximize structural life and sub-system reliability, as well as to minimize repair-cycle times.

In 1992, to replace the obsolescent Morane MS 760 Paris Jet, DAHER-SOCATA began an on-schedule and on-budget delivery of TBM 700A model aircraft to the French Air Force and French Army Aviation. According to feedback from French military pilots, the TBM is, "simple to master, a dream to fly and has superior performance characteristics across the entire flight envelope". The French Armed forces have accumulated up to 600 flight hours per year per aircraft in accomplishing a wide range of VIP-passenger and light-cargo missions in varied operating environments, including operations in combat zones. DAHER-SOCATA has also delivered one TBM 700A model aircraft to the French national flight test center (CEV) and four aircraft to the Indonesian government for their use in calibrating airfield navigation aids throughout their country.

*Certified in 1999, **the TBM 700B** model added a larger cargo door and an optional pilot entry door. The introduction of the TBM 700B was the beginning of a period of significant commercial success in the US. With the addition of a gaseous backup oxygen system (with quick donning masks) the service ceiling of the TBM 700B was raised to 31,000 ft.*

*In 2003, the **TBM 700C2** was certified with an increased Max Take-off Weight (7,394 lbs), allowing a payload of 865 lbs with full fuel. This modification included re-enforced airframe, reinforced landing gear, seats certified to 20 G, a new interior and new rear external luggage compartment.*

*In 2006, DAHER-SOCATA introduced the **TBM 850**. The TBM 850 was powered by the new Pratt & Whitney PT6A-66D powerplant which produced 1825 HP (flat rated to 850 shaft horsepower) and gave the TBM 850 jet-like performance with turboprop efficiency and economical operation.*

The TBM 850 was further upgraded in 2008 has with the G1000 all-glass integrated cockpit panel and again in 2012 with the option of the TBM "Elite Interior" that allowed the TBM the flexibility to switch quickly between a 6 seat and a 4 seat plus extended luggage configuration. The "Elite Interior" was highly praised by its customers and is now a standard offering on the TBM 900.

In 2010 Socata started studies of further improvements of the TBM based on requests from its customer base. This has resulted in today's TBM 900.

Model Name	TBM 700A	TBM 700B	TBM 700 C2	TBM 850 Legacy	TBM 850 Glass	TBM 850 Elite	TBM 900
Serial Number range for this model	1 - 141 except 126 & 129	142 to 242; + 126 & 129	243 to 345	346-433	434-609	610-684	1000 on
Certification date	03/10/1990	1998	2003	2005	2007	2012	2013
Production Years	1990-1998	1999-2002	2003-2005	2006-2007	2008-2011	2012-2013	2014 on
Powerplant	P&WC PT6A-64	P&WC PT6A-64	P&WC PT6A-64	P&WC PT6A-66D	P&WC PT6A-66D	P&WC PT6A-66D	PT6A-66D
Shaft Horse Power (SHP)	700	700	700	850	850	850	850
Thermodynamic power (HP)	1583	1583	1583	1825	1825	1825	1825
Characteristics							
Seating	6/7	6	6	6	6	6	6
Pilot door	no	option	option	option	option	option	standard
Capacity							
Fuel (US Gal)	290,6	290,6	290,6	290,6	301	301	301
Usuable Fuel (US Gal)	281,6	281,6	281,6	281,6	292	292	292
Usuable Oil (quarts)	6,0	6,0	6,0	6,0	6,0	6,0	6,0
External Dimensions (ft)							
Overall Length	34ft 11in	34ft 11in	34ft 11in	34ft 11in	34ft 11in	34ft 11in	35 ft 2in
Overall Height	14ft 4in	14ft 4in	14ft 4in	14ft 4in	14ft 4in	14ft 4in	14 ft 4in

Model Name	TBM 700A	TBM 700B	TBM 700 C2	TBM 850 Legacy	TBM 850 Glass	TBM 850 Elite	TBM 900
Wing Area (ft²)	194	194	194	194	194	194	197
Span	41ft 7in	41ft 7in	41ft 7in	41ft 7in	41ft 7in	41ft 7in	42ft 1in
Internal Dimensions (ft)							
Cabin Length (Bulkhead to Bulkhead)	14ft 11in	14ft 11in	14ft 11in	14ft 11in	14ft 11in	14ft 11in	14ft11in
Cabin Height	4ft	4ft	4ft	4ft	4ft	4ft	4ft
Cabin Width	3ft 11in	3ft 11in	3ft 11in	3ft 11in	3ft 11in	3ft 11in	3ft11in
Weights (lb)							
Max Ramp	6,614	6,614	7,430	7,430	7,430	7,430	7,430
Max Takeoff	6,579	6,579	7,394	7,394	7,394	7,394	7,394
Max Landing	6,250	6,250	7,024	7,024	7,024	7,024	7,024
Maximum Zero Fuel (lbs)	6,001	6,001	6,032	6,032	6,032	6,032	6,032
Empty Weight	4,050	4,167	4,685	4,699	4,579	4,589	4,629
Max Payload	1,951	1,834	1,347	1,333	1,453	1,443	1,403
Useful Load (lbs)	2,564	2,447	2,745	2,731	2,780	2,770	2,803
Available Payload w/Max Fuel (lbs)	652	535	833	819	868	858	891
Available Payload w/220 gals Fuel (lbs)	1,070	953	1,251	1,237	1,357	1,347	1,307
Max Baggage Capacity	330	330	330	330	330	507	507

Model Name	TBM 700A	TBM 700B	TBM 700 C2	TBM 850 Legacy	TBM 850 Glass	TBM 850 Elite	TBM 900
Limitations							
Vmo (KCAS)	266	266	266	266	266	266	270
Va (KCAS)	158	158	158	158	158	158	158
Vle (KCAS)	178	178	178	178	178	178	178
Crosswind (N)	20	20	20	20	20	20	20
PSI	6,2	6,2	6,2	6,2	6,2	6,2	6,2
Distances							
TO (SL elev/ISA temp) *50ft obstacle	2,133	2,133	2,840	2,840	2,840	2,840	2,380
TO (6000 ft / ISA + 20°C) *50ft obstacle	31,495	31,495	4,150	4,150	4,150	4,150	3,550
Landing (SL / ISA *50ft obstacle	2,135	2,135	2,430	2,430	2,430	2,430	2,430
Vso	60	60	65	65	65	65	65
Climb							
Time to Climb (min/Attitude ISA)	15/FL 250	15/FL 250	15/FL 250	14/FL 250	14/FL 250	14/FL 250	16/FL280
Max gradient (ft/NM)	1,875	1,875	1,570	2,005	2,005	2,005	1,000 ???
Max	876	876	734	937	937	937	

Model Name	TBM 700A	TBM 700B	TBM 700 C2	TBM 850 Legacy	TBM 850 Glass	TBM 850 Elite	TBM 900
Ceiling (ft)							
Certified ceiling	30,000	30,000	31,000	31,000	31,000	31,000	31,000
Long Range Cruise							
Long Range Speed (KTAS)	242	242	249	252	252	252	252
Long Range FL	FL 290	FL 290	FL 310	FL 310	FL 310	FL 310	FL 310
Maximum cruise							
Maximum Cruise Speed (KTAS)	300 295*	300 295*	294 289*	320 315*	320 315*	320 315*	330*
Maximum Speed FL	FL 260	FL 260	FL 260	FL 260	FL 260	FL 260	FL280
Range at Maximum Cruise (Max Fuel) - IFR Reserve (NM)	1,378	1,350	1,315	1,365	1,410	1,410	1,440

* Max Cruise Speed with Radar Pod installed

TBM 700A TBM 700B TBM 700 C2 TBM 850 Legacy TBM 850 Glass TBM 850 Elite TBM 900

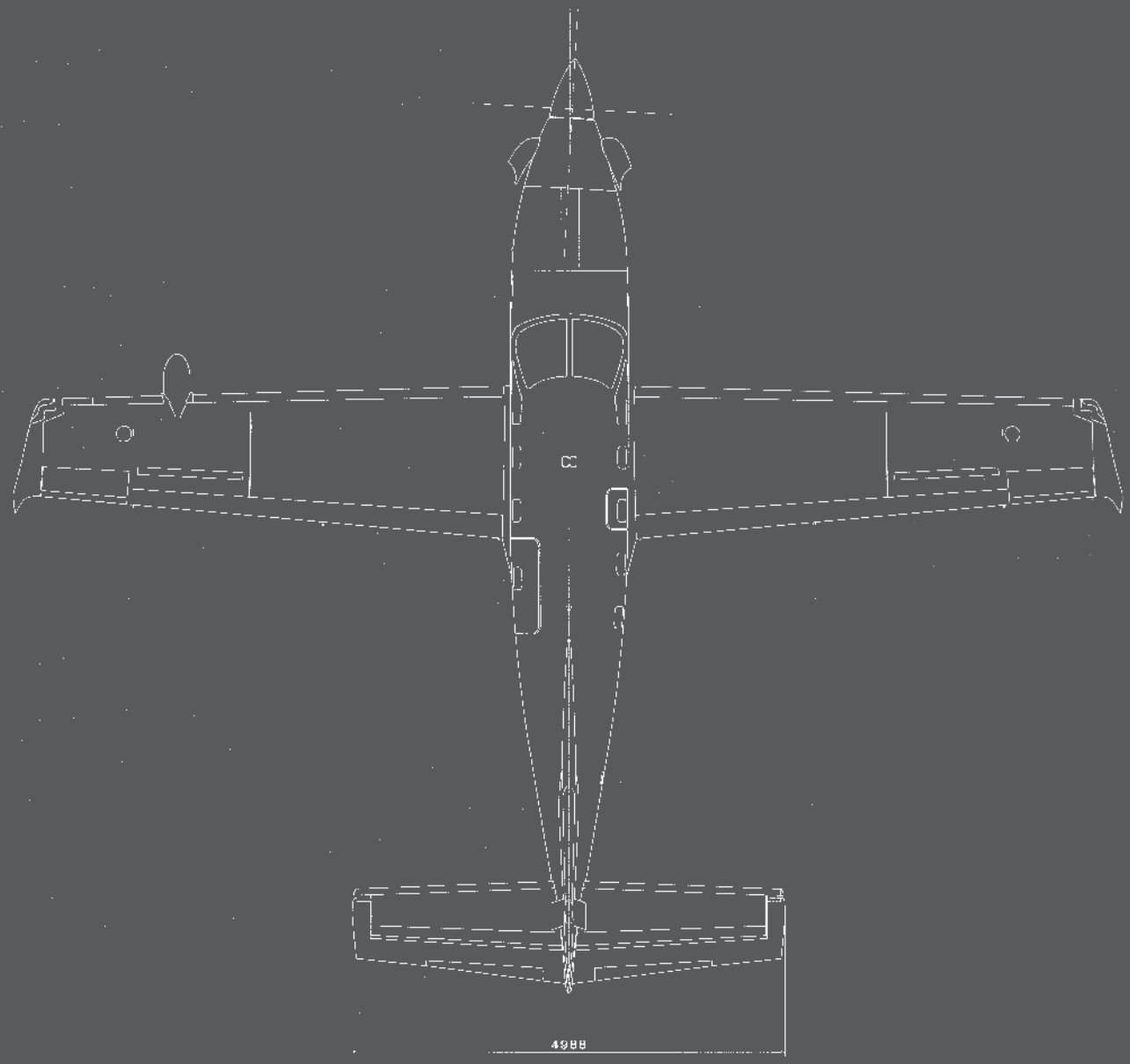
4988

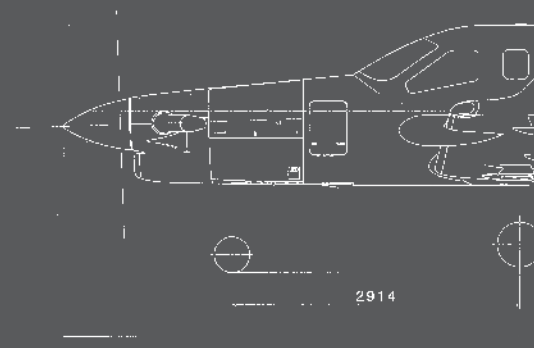
2914

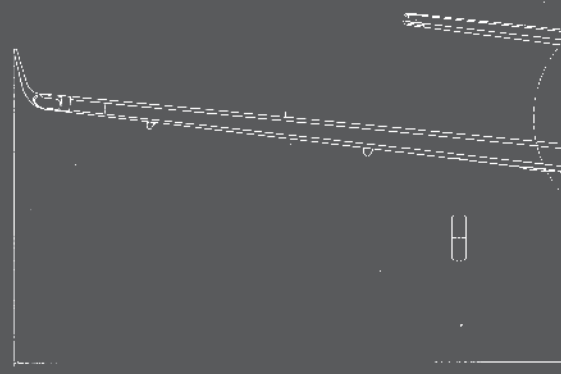

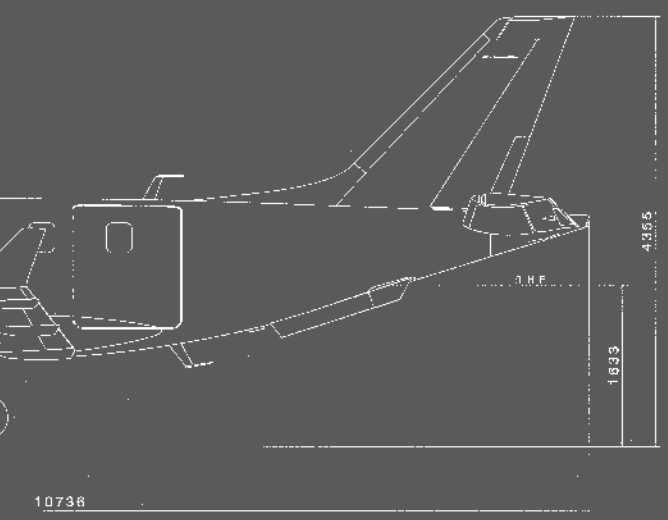

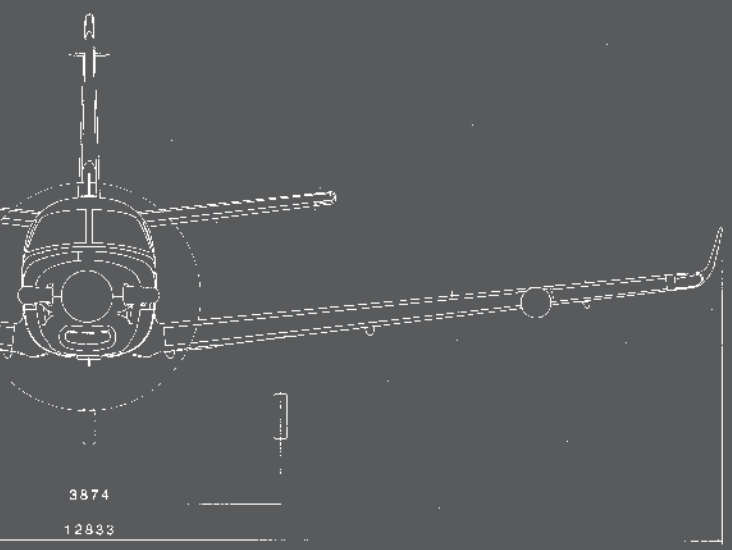

2.

Technical Description

PROVEN AIRCRAFT DESIGN

The TBM's economy, insurability and ease of transition as well as its time proven design and unmatched safety record provides its owners and operators with much more than a light jet can offer. The TBM 900 is fully certified and available today worldwide direct from the factory or from a comprehensive network of distributors and supported by a worldwide network of service centers.

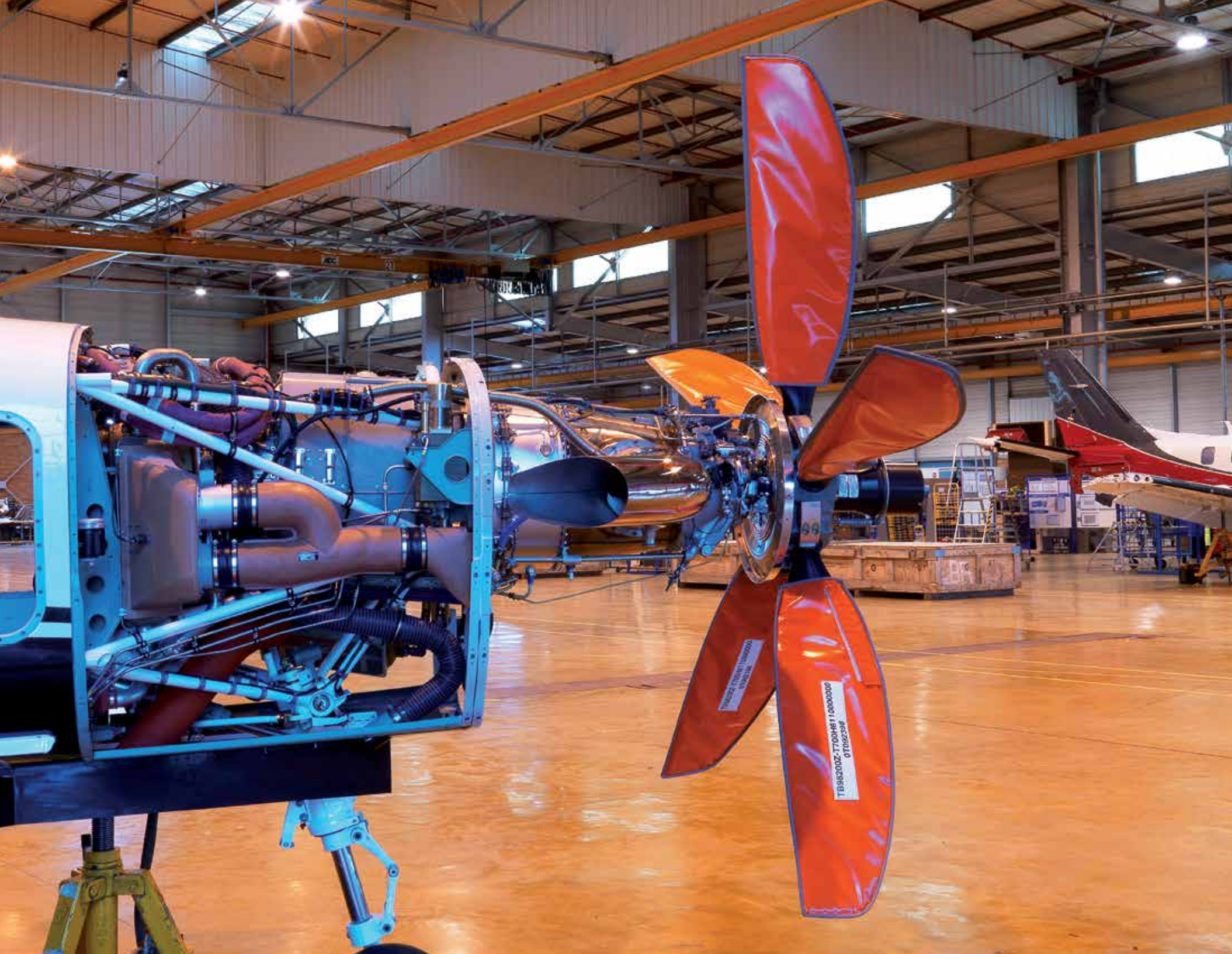
TB982002-T700H611000000
0TD92398

DAHER-SOCATA's TBM was designed to be a revolutionary aircraft, and the proof is in its features. The TBM offers impressive range, Light Jet like speed but with much better fuel efficiency, lower operation costs, comfortable cabin and remarkable high reliability.

The TBM is a six-seat, single pilot certified aircraft, powered by a single engine Pratt & Whitney Canada PT6A Turboprop. It has low wings, a conventional empennage with horizontal and vertical stabilizers and a tricycle retractable landing gear. Its semi-monocoque fuselage uses combinations of conventional metallic contruction and advanced composite design for which DAHER-SOCATA is acknowledged as a world leader.

MANUFACTURED WITH CARE

When you buy a TBM you benefit from a spirit of innovation that continues today as it did at the beginnings of Morane-Saulnier in 1911 backed by over 150 years of industrial experience in the Daher Group.

DAHER-SOCATA combines the expertise of an aircraft manufacturer, with an aerostructures manufacturer and provider of industrial and logistical services. Each area of proficiency is backed by advanced technological specialties.

Having over a century of "know-how" as an aircraft manufacturer naturally bolsters its expertise in the aerostructures business. Advanced aerostructures projects for other aircraft manufacturers allows DAHER-SOCATA to incorporate new techniques and manufacturing methods into the TBM that would not normally be practicable for a company of Socata's size.

The combination of expertise enables DAHER-SOCATA to create more added-value for its customers (both for the TBM and for Aerostructures projects) by constantly introducing innovative solutions for its projects, as well as anticipating the challenges associated with systems integration and volume manufacturing.

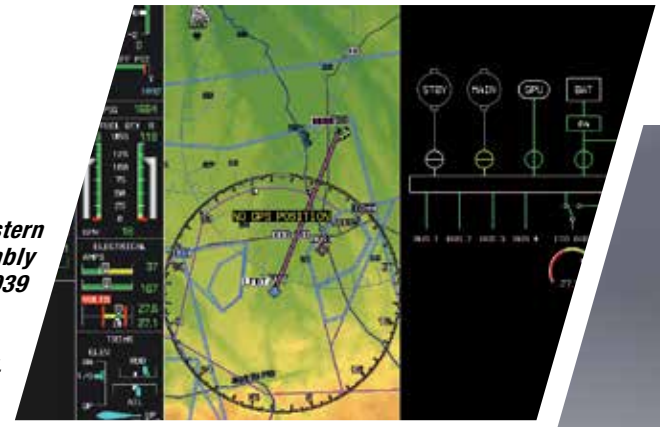

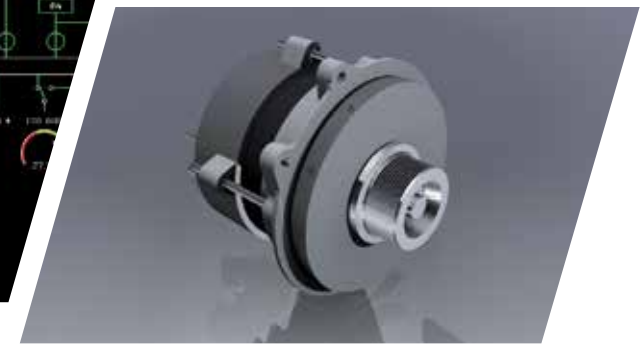

DAHER-SOCATA's family in Tarbes in South-Western France is the home of the TBM final assembly line. Development of the facility started in 1939 and it now covers over 128 acres. It hosts:

- *10 main buildings encompassing over 900,000 sq.ft.*
- *more than 300* ***manufacturing*** *machines*
- *one fully digital composite production unit*
- *one fully digital stretch-formed sheet metal unit*
- *12 structural assembly lines, including one aircraft final assembly line*
- *1,300 employees*

The TBM 900 airframe design employs several fail-safe structural design techniques, including the use of multiple load paths and a crack-stopper band to maximize sub-system reliability/durability and structural life. The TBM 900 aircraft is essentially identical to that of the TBM 850 and 700 models. Airframe designers carefully chose a variety of aluminum alloys, highstrength steel (including titanium). However TBM 900 uses more advanced composite materials such as carbon fiber for its new items (winglets, new cowlings, etc.) to maximize structural strength and durability while minimizing aircraft weight and both acquisition and life-cycle support costs.

ELECTRICAL SYSTEM

The airplane is fitted with a 28-Volt direct-current electrical system.

Electrical supply is obtained from various power supplies :
– a starter generator
– a stand-by generator
– a lead-acid, 42 amp.h battery
– a ground power unit, via a plug, located on the left side.

Connection relays, main bus bar, generator regulation and protection systems and control logic systems come together in an Electrical Power System box located in front baggage compartment upper section. The TBM 900 is fitted with a 300 amp starter generator – faster, cooler starts, more electrical power in reserve, new Stand-by Alternator, Stand-by Generator, Auto-Start Feature – reduced pilot workload.

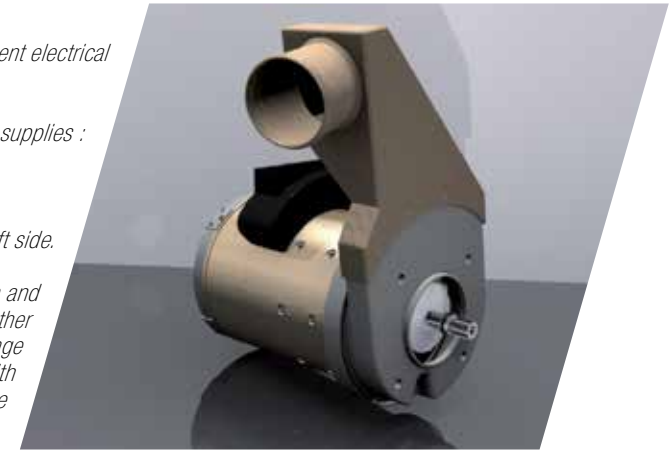

LIGHTING

The airplane is equipped with two navigation lights, three strobe lights, two landing lights, two taxi lights, two recognition lights and a wing leading edge icing inspection light.

Landing lights are embedded in the winglets and located in leading edges. As an option a Pulse lite system can be installed, it enables the pilot to control landing light flashing to be seen by the control tower or in heavy traffic areas.

FATIGUE TEST RESULTS

Over the past 20 years, DAHER-SOCATA has thoroughly validated the TBM aircraft structural design by performing rigorous strength and durability tests – the results of which are summarized the following table.

Pressurization Cycles	38,568
Equivalent Simulated Flying Hours	68,352
Equivalent Simulated Landings	136,800
Positive G-Force Limit	+6.1 g
Negative G-Force Limit	-4.1 g
Extreme Positive G-Force Limit	+9 g
Extreme Negative G-Force Limit	-6 g
Certified Positive Flight Load Factor Limit	+3.8 g
Certified Negative Flight Load Factor Limit	-1.5 g

Structural Life Limit 12,000 flights / 16,200 flying hrs

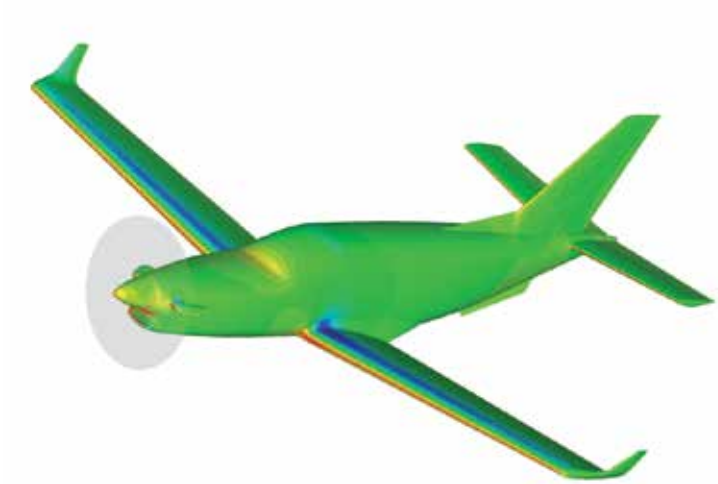

WINGS AND AERODYNAMICS

The TBM 900's aerodynamically optimized wings incorporate fail-safe technology and offer superior handling qualities throughout the flight envelope. The TBM 900 wings are built around two wing spars, one forward and one aft, which are milled from a soled billet of aircraft-grade aluminum alloy. Two milled aluminum carry-through spars provide additional rigidity and strength.

Placement of the TBM 900 wings aft of the pilot's field of vision substantially improves the ease of operation – especially during landings.

The TBM 850 has a wing-loading in excess of 38 lbs/sq.ft (185 kg/m²) and combined with its 6.5° wing dihedral provides a stable ride in turbulent conditions. The airfoil was designed to optimize both high performance speed and maneuverability.

After extensive testing and analyses in wind tunnel and CAD (Computer Aided Design), a RA 16-43 airfoil (with a relative thickness of 16%), based on the NACA 43012 profile, at the chord and RA 13.3-43 at the wing tips was chosen. The wing design decreases drag (increasing performance and fuel economy) while providing excellent low speed performance. Mechanical "spoilerons" and the TBM 900's winglets further improve low-speed handling and aileron authority. Large split-flaps allow the TBM 900 to land at speeds normally associated with piston-singles while the wing design and powerplan allows it to cruise at high altitude at 330 kts!

EMPENNAGE

The empennage consists of a vertical stabilizer with rudder and a 6.5° dihedral horizontal stabilizer with elevator for superb maneuverability at high and low speeds. Mechanical push/pull tubes assure reliable actuation of the TBM 900's control surfaces throughout the flight envelope.

LANDING GEAR AND BRAKING SYSTEM

The tricycle landing gear system is electrically controlled and hydraulically actuated. The main gear retracts inboard into the wings. The nose gear retracts rearward into the lower engine compartment and is completely enclosed by the gear doors when retracted. An aural (horn) warning system in the cockpit will sound if either the power lever is reduced within half inch of the aft stop, or if the flaps are extended to the landing position when the gear is in the retracted position. In the unlikely event the primary gear extension system fails, a hand-pump linked to an emergency hydraulic reservoir is available for the pilot to use in manually extending the gear. Landing gear braking is provided to each main wheel via hydraulic discs, which can be augmented with engine thrust reverse power to enable a fully loaded TBM to stop in much less than 1500 ft.

POWERPLANT

The TBM 900 is powered by the Pratt & Whitney Canada PT6A engine. Its simple design offers easy maintenance, efficiency and low cost of operation. It is covered by one of the most extensive support networks in the industry.

Variants of the PT6A are in use on more than 100 different types of aircraft. Safety proven, from years of regional airliner and commercial aircraft operations with over 43,000 engines in the field (spanning over 390 million flight hours), the PT6A is recognized as one of the most reliable aircraft powerplants ever built.

The PT6A-66D model used on the TBM 900 has a thermodynamic rating of 1,825 horsepower and a flat-rated output of 850 shaft horsepower making it the most powerful PT6A (in terms of thermodynamic power) built to date. The main components of the PT6A include a multi-stage compressor (centrifugal and axial), a combustion chamber, a compressor turbine with enhanced CT wheel and first stage compressor with "single crystal" blades allowing higher ITT operating limits, and an independent two-stage turbine driving the output shaft through a reduction gearbox.

Single-lever power control and auto-starter shutoff make the TBM 900 one of the simplest PT6A powered aircraft to manage.

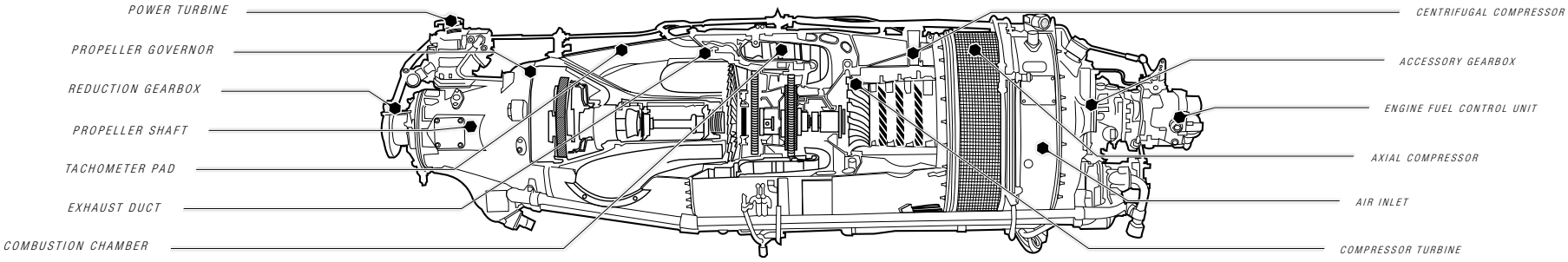

FUEL SYSTEM

The two TBM 900 fuel tanks are located in the wings and have a total usable fuel capacity of 291.6 gallons (1,100 liters). A capacitive-type fuel gauging system provides accurate fuel level readings at all flight attitudes. Every 10 minutes in flight, and every 5 minutes on the ground an electrical sequencing unit automatically switches from one tank to the other and continuously maintains tank balance without increasing the pilot's workload.

The high-pressure engine-driven pump is capable of operation alone. However, a low-boost mechanical pump is pressuring the fuel line. As a back up, a high-boost electrical pump is located behind the firewall in case of failure of the low-boost pump. The primary Fuel Control Unit, connected to the throttle in the cockpit, provides the engine with clean fuel at the required pressure and flow topermit control of engine power within a range of appropriate Air/Fuel ratio. If necessary, the pilot can manually control fuel flow with a manual override lever, next to the throttle, in case of an emergency. The fuel tanks are coated to provide maximum protection against microorganism damage.

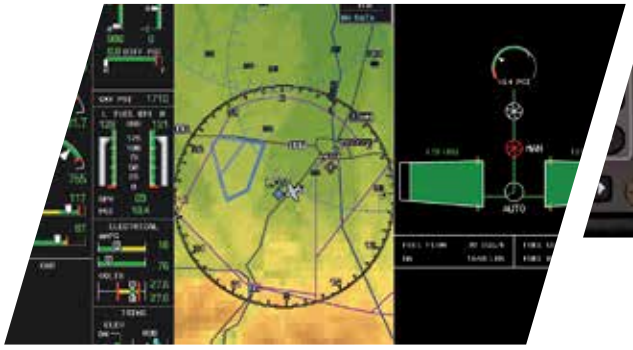

PRESSURIZATION AND ENVIRONMENTAL SYSTEM

The dual zone pressurization and air conditioning systems utilize engine bleed air to pressurize, heat/cool, and defog the cabin and cockpit windows. Pressurization control is integrated into the TBM 900s G1000 avionics suite and is automatically managed by the TBM.

The pressurization system is capable of maintaining a 9,350 ft cabin altitude at 31,000 ft and a 6,400 ft cabin altitude at 25,000 ft. Sea level cabin altitude can be maintained up to 14,430 ft. Cabin temperature can be controlled in two separate zones (cockpit and cabin), which can either both be managed from the cockpit or by seperate fore and aft controllers.

The engine-driven compressor air conditioning system is fully automatic and can quickly cool the aircraft on hot days.

DE-ICING SYSTEM

The TBM 900 de-icing system uses a combination of engine exhaust gas, an engine inertial separator, electrical windshields, an electrically de-iced propeller, electrically heated stall-warning and pitot-static and pneumatic boots. The de-icing systems are manually selected through switches conveniently mounted on the left hand side of the panel. A high speed, automatic cycling, pneumatic boot system is used to de-ice the leading edges of the wings, horizontal stabilizer and vertical stabilizer. The TBM 900 deice boot design eliminates ice bridging on the leading edge in flight due to its automatic cycling every 67 seconds. A wing inspection light is provided to monitor ice buildup during night flight.

COCKPIT CONTROLS

The TBM 900 comes equipped with dual controls as standard equipment. The control system includes two control wheel columns, adjustable rudder pedals, hydraulic brakes and mechanical nose gear steering. Pushrod and cable systems are used to actuate the rudder, elevator, spoilers and ailerons. Primary pitch and yaw trim are electrically powered through switches mounted on the pilot's control wheel, and electric aileron trim and manual pitch trim are on the central pedestal. The TBM 900 has an integrated all-glass cockpit for each crew position independently fed from separate Pitot and Static systems. The engine instruments are located on the left side of the central large 15" LCD screen allowing good visibility for both crewmembers. The crew seats include the standard three-point restraint harness and are fully adjustable allowing the pilot and co-pilot a high level of comfort on long flying days. Instrument lighting includes cockpit floodlights, background lighting for all switches, overhead LED map lights and control yoke map lights.

OXYGEN SYSTEM

The emergency oxygen system is supplied by a 50.3 cubic foot composite bottle that can sustain four passengers and two crew members for one hour above 15,000 feet. If cabin pressurization is lost, oxygen will be provided to the crew with two pressure-demand masks and with four constant-flow masks for the passengers. Passenger masks are automatically deployed in case of sudden depressurization with an option for manual deployment from the cockpit. The oxygen system was designed for safety and easy servicing by maintenance personnel by placing the oxygen bottle in the starboard wing fairing allowing access to the bottle without the need to enter the cabin area.

VISIBILITY FROM THE COCKPIT

The TBM 900 cockpit includes four large windshield sections that provide the pilot with over 180 degrees of maximum visibility from both crew positions. Since the TBM 900 wings are located behind the cockpit, both crew positions also have excellent downward visibility. Additionally, the TBM 900 has a negative deck angle in the landing configuration with full flaps extended which further improves forward visibility during the landing phase.

All-Glass Integrated Flightdeck

The TBM 900 comes standard with the Garmin G1000 suite. With its large screen displays and digital presentation of data, the G1000 meets all the requirements of today's serious pilots and owners, for whom the very latest technology is a must. It integrates all primary flight, navigation, communication, terrain, traffic, weather and engine data on two large 10.4 inch and one 15-inch high-resolution glass displays. The G1000 delivers at-a-glance awareness that is comprehensive and intuitive, and allows for an easy transition from the legacy Garmin avionics.

Everything from air data to engine instrumentation, traffic and terrain is displayed onthe super large 15-inch multi-function display, which is the largest available today on any turbine aircraft in this category.

Dual RVSM-compliant Air Data Computers (ADCs) and dual Attitude and HeadingComputers (AHCs) work in concert with the three-axis digital autopilot, and they supply complete flight management functionality through two conveniently located control panels. Traditional mechanical gyroscopic flight instruments are replaced by an advanced and modern architecture, which provides accurate digital output referencing the aircraft position, rate, vector, and acceleration data.

AVIONICS SUMMARY

- GMA 1347C Dual digital audio controllers with integrated marker beacon receiver, intercom and public address capability the pilot and co-pilot side.
- 2 GDU 1040A, 10.4" PFD displays with three axis flight dynamics, airspeed, altitude, vertical speed, HSI with perspective modes, turn, bank side slip, NAV/COM frequency indication and AP annunciation.
- 1 GDU 1500 15" multi-function display with engine displays (including optimum TRQ setting display), pressurization, electrical, fuel, flaps and trims indication, Crew Alerting System (CAS), checklist, aircraft synoptic and super large navigationmapping system.
- 2 GIA 63W Nav/Com/ILS/WAAS GPS systems.
- 2 GEA 71 Engine and airframe interface units.
- 2 GRS 77 Attitude and Heading Reference Systems (AHRS).
- 2 GMU 44 tri-axial magnetometers.
- 2 GDC 74B digital air-data computers
- 1 GTX33 Mode S Transponder.
- 1 GCU 475 remote FMS control panel conveniently located on the central console.
- 1 GFC 710 autopilot mode controller located in upper central panel.
- 1 GTA 82 yaw damper including auto yaw-trim.

The GFC 710, was the first entirely new autopilot designed and certified for the 21st century, has all the data necessary to optimize TBM performance over the entire airspeed envelope.

The GFC 710 includes an automatic yaw control system that maintains coordinated flight by keeping ''the ball centered" throughout the duration of the flight (regardless of pitch and power settings).

The G1000 suite is customized specifically to the TBM and offers easy to use information such as Max Cruise and Long Range optimum Torque setting display, checklist, or systems synoptic for fuel, and electrical systems. The G1000 system, provides unprecedented situational awareness for weather, traffic and terrain, while the complete flight management functionality eases cockpit workload. Flight information is easier to scan and process. Simplicity reduces the workload, thus increasing safety to a levelnever reached in that category of high performance aircraft.

The TBM 900 avionics packege also includes the L-3 Avionics ESI-2000 Trilogy which provides integrated backup for attitude, altitude, airspeed, slip/skid and optional heading information. It replaces traditional electro-mechanical standby instruments with a compact and easy to read 4" x 3" display backed by an internal lithium-ion battery.

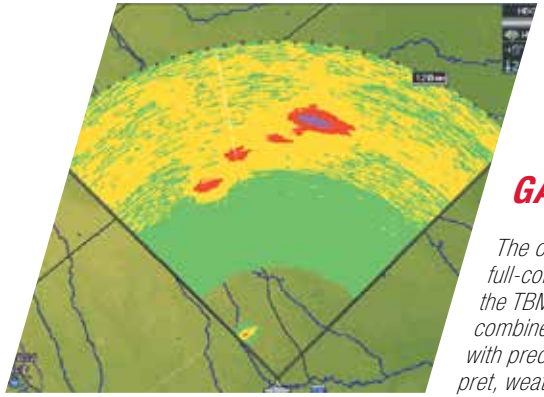

GARMIN GWX 70

The optional Garmin GWX 70 digital Radar system brings full-color storm cell tracking to the G1000 avionics suite in the TBM 900. This Doppler-capable weather avoidance tool combines excellent range and adjustable scanning profiles with precision target definition for accurate, easy-to-interpret, weather analysis in the cockpit. With pilot-adjustable horizontal scan angles of up to 120°, you can easily focus scanning on the areas you want to watch, while vertical scanning lets you focus on storm tops, gradients and cell buildup at various altitudes. Plus, Weather Attenuated Color Highlight (WATCH™) can identify areas beyond the radar's capability that may contain even more hazardous areas of precipitation.

GARMIN GSR 56

The GSR 56 optionally gives you access to on-demand world-wide weather information, text/voice communications and near real-time position tracking through the Iridium satellite network. The Iridium network provides seamless global coverage nearly everywhere your aircraft can go — even in locations not previously served by other satellite networks. Simply set up voice and data service (subscription required) and start enjoying added safety and convenience on every flight.

GARMIN GDL69A

The optional GDL 69A delivers XM WX Satellite Weather to the G1000 system in the TBM. This remote datalink receiver helps you make informed, safe decisions based on the weather, providing access to NEXRAD weather images as well as METARs, TAFs, Winds Aloft, SIGMETs, AIRMETS etc.

In addition, the sound-enabled GDL 69A also provides SiriusXM Satellite Radio via the TBM 900's audio system. XM Satellite Weather and Radio Coverage is currently limited to North America.

GARMIN VHF DATALINK RADIO (GDR 66)

Now mandatory in Europe, the GDR 66 datalink radio is a VDL Mode 2 transceiver that can be provided as optional equipment to support VHF ACARS capability as well as Link 2000+ CPDLC capability. Controller-Pilot Data-Link Communications (CPDLC) is an air/ground data-link application, which enables the exchange of text messages between controllers and pilots. CPDLC complements traditional voice communications, providing pilots and controllers with an additional communications medium. The objective of CPDLC is to improve the safety and efficiency of air traffic management. The GDR 66 also can function as a third comm radio if required.

The GDR 66 is integrated with the TBM 900's Garmin G1000 avionics suite.

OTHER OPTIONS

Cabinet & Toilet Options

Several cabinets enable you to optimize the storage space between the intermediate and the pilot seats.

- *One lower storage cabinet (left or right)*
- *One top storage cabinet (left or right)*
- *One pilot case support (right side or left side)*
- *One lower storage cabinet with cooler (right side only)*


OVE COVER
HANDLE TO OPEN

3.

Fly in Style

The TBM 900 gives you hand-made craftsmanship in a thoroughly modern package. The TBM 900's interior appointments are a result of cooperation between DAHER-SOCATA's design department and the prestigious design firm of Catherineau. The TBM 900 interior offers even more comfort and luxury than our previous TBM models.

We designed the TBM 900 to make doing business even easier and to make flying a pleasure for all your senses; from the sleek lines outside, to the wood or carbon-fiber with leather trim inside.

Top grain leather is used on all seated surfaces with detailed stitching. Seats easily recline allowing you to relax ingenerously sized, sculpted deep cushions with padded leather armrests.
TBM 900's new seat shape is the work of Malherbe Design studio in Paris. The beautifully gadrooned seat just provides of the sport car's feel. It's all about speed!

STANDARD LEATHER SELECTION

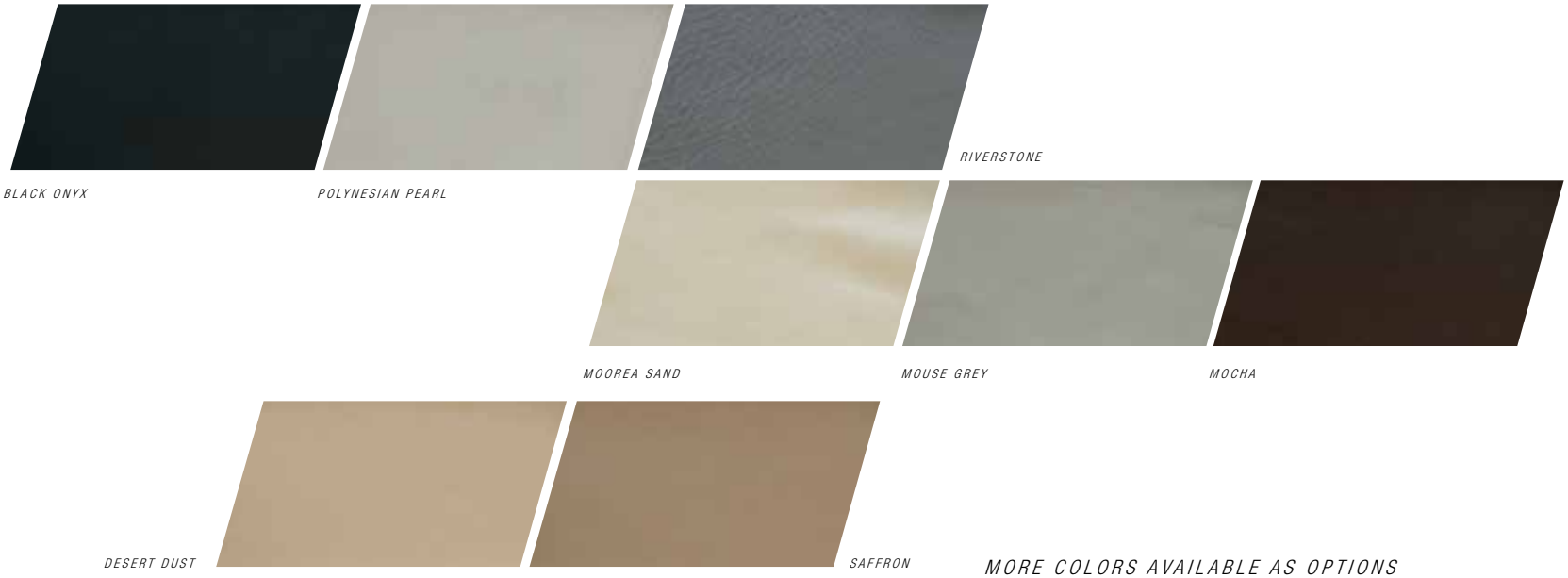

MORE COLORS AVAILABLE AS OPTIONS

TRIM SELECTION

SEE MORE ON WWW.TBM.AERO

4.

Master of Performance

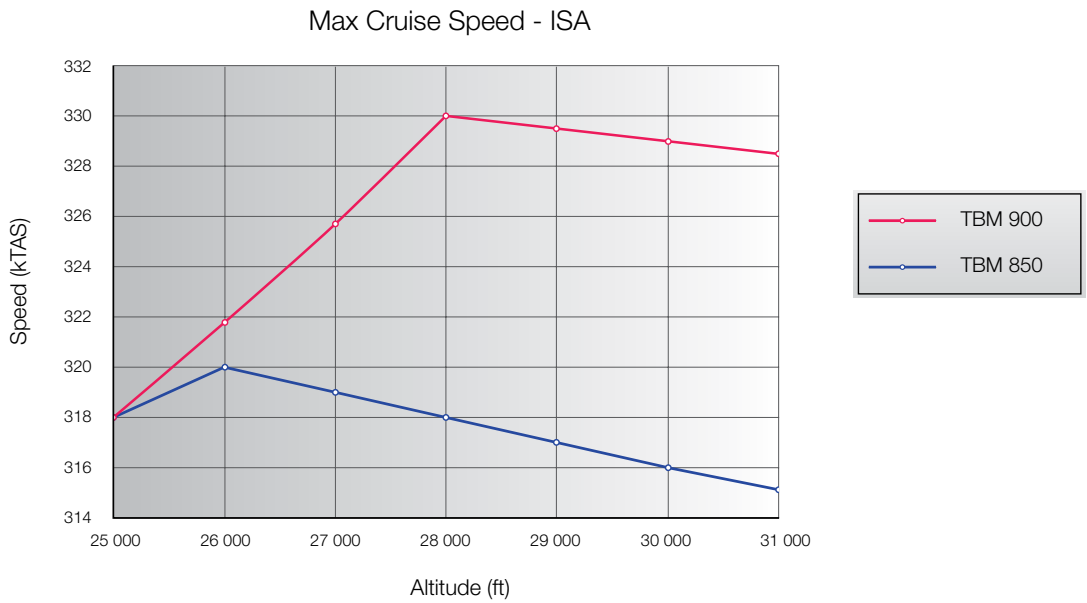

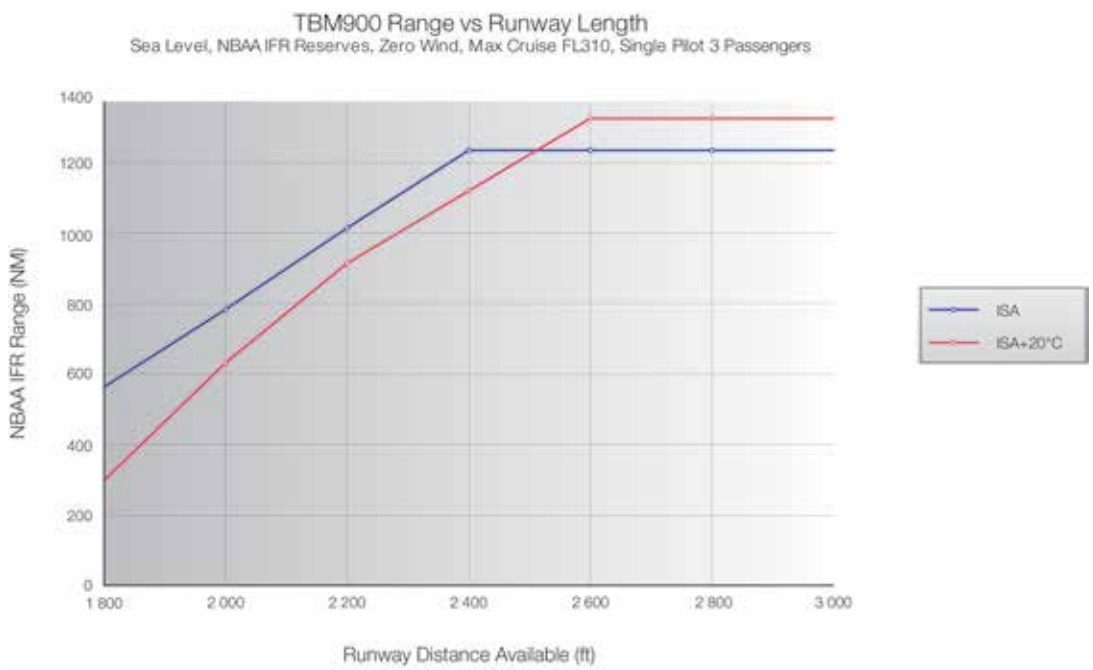

PERFORMANCE

The TBM 900 benefits from everything that DAHER-SOCATA has learned from the previous versions of the TBM family. The TBM 900 offers even greater speed, range and efficiency than previous TBMs. It has also improved short field capabilities and, as a result, can be used on just about all general aviation runways. This is a very different than the case of most light jets where their limited "hot and high" runway performance can mean that a runway available to the TBM is simply not available to them or will require substantial reductions to the cabin or fuel load.

With the TBM 900 you can fly closer to your destination while still carrying everythimng that you need for your trip.

Approaching at only 90 KIAS or less, short runways or short unpaved surfaces will accommodate the TBM 900. The new 5-blade Hartzell propeller reduces noise and improves take off performance. The availability of thrust reversal on the TBM 900 substantially improves safety margins over aircraft without these capabilities when flying into shorter fields, (particularly when the surface is wet) allowing landing on extremely short strips and runways safely using less than 1,500 ft.

TAKEOFF DISTANCE

The TBM 900 offers excellent short field performance and load carrying capabilities. While FAR Part 23 only requires Ground Roll to be used in calculating runway length, for or the purposes of the following charts, runway distances are selected based on the distance to clear a 50 ft obstacle to provide an enhanced safety margin.

CLIMB PERFORMANCE

The TBM 900 can climb to its certified service ceiling of 31,000 ft in just a little over 18m45s when departing from sea level at its maximum takeoff weight. This performance exceeds that of the vast majority of turboprops and some light jets allowing the operator to climb faster above weather and to fly more trips and at higher, more fuel efficient altitudes reducing operating costs while at the same time enhancing passenger comfort.

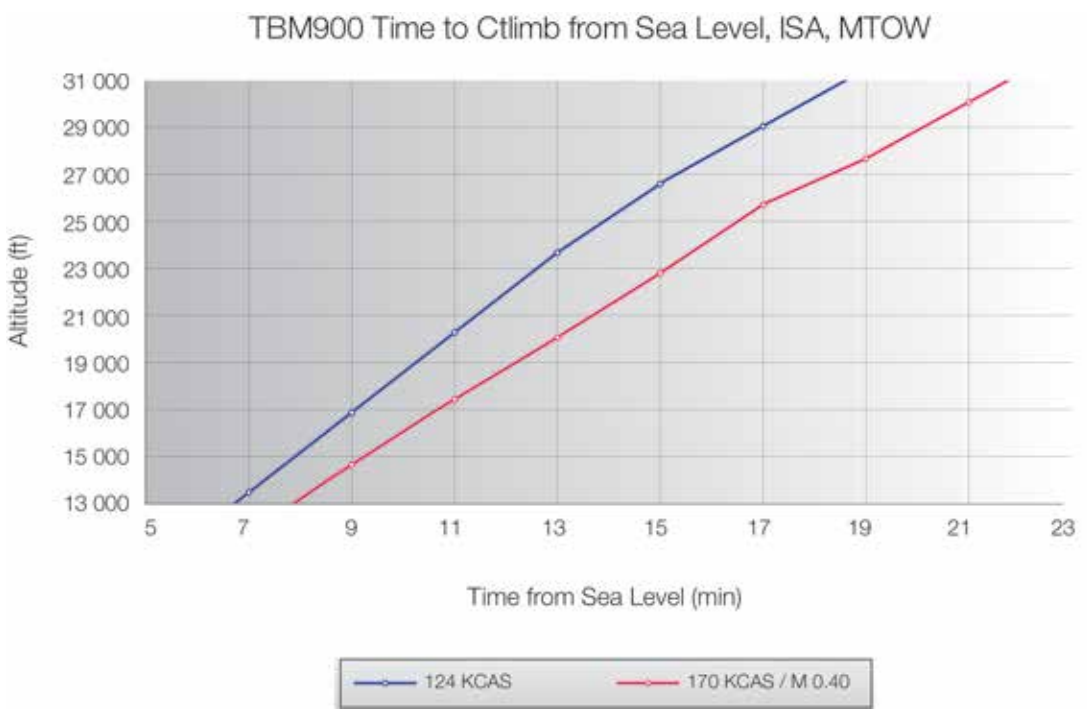

CRUISE SPEED

The TBM 900 offers the cruising speed typical of a light jet but with the economy of a single-engine turboprop. Maximum cruise speed at 28,000 ft in ISA conditions is 330 KTAS however at the TBM 900's service ceiling of 31,000 ft, cruise a speed is 326 KTAS can be achieved.

This is one of the keys to the TBM 900's utility. Rather than having to fly at lower altitudes for speed or travel more efficiently but much more slowly at altitude, the TBM 900 offers both sparkling performance and ecomomy at its maximum cruise altitude.

Another important feature of the TBM 900 is excellent performance at "high-teens" altitudes, offering cruise speeds exceeding 290 KTAS. This flexibility allows the pilot a range of options to maximize ground speed in case of strong headwind at higher altitudes or for shorter trips.

MAX CRUISE FLIGHT PROFILES

- *Power at Max Cruise as defined in the TBM 900 POH.*
- *Takeoff Weight includes the fuel required to complete the trip with the indicated number of passengers and fuel reserves.*
- *Flight Time includes climb, cruise and descent.*
- *No allowances have been included for taxi time or ATC procedures.*
- *Block Fuel includes takeoff, climb, cruise and descent.*
- *Cruise Altitude represents an optimum altitude for the distance flown.*
- *Reserve fuel is based on NBAA IFR specifications using 100 nautical miles as the alternate distance and assuming a climb to 20,000 ft.*

RANGE: NBAA IFR

The TBM 900 provides greater range and load carrying performance than light jets particularly allowing for the likely limited availability of flight levels above FL310 across most of the continental US and Western Europe to light jets that depend on access to these "higher" flight levels to obtain their quoted cruise range performance.

NBAA Reserve Max Cruise IFR Range with 4 Adults on Board - 1,150 nm
NBAA Reserve Long Range Cruise with 4 Adults on Board - 1,514 nm
The TBM 900 shows the excellent load and passenger carrying capabilities allowing four adults to fly for over 1,300 nm at maximum cruise speed of 326 KTAS at 31,000 ft with NBAA reserves.

FUEL EFFICIENCY

The TBM 900 offers both better fuel consumption and performance than typical turboprops, as well as substantially better fuel consumption and equivalent performance to typical light jets.

Characteristics

PT6A-66D Thermodynamic Power	1,825 SHP	
PT6A-66D Nominal (flat-rated) Power	850 SHP	
Time to climb to 28,000 ft/31,000 ft	16:00 min/ 18:45 min	
Maximum cruise speed at 28,000ft	330 KTAS	
Recommended fast Cruise at 31,000ft	290 KTAS	
Economy cruise speed at 31,000ft	252 KTAS	
FAA Certified ceiling	31,000 ft	
Take-off distance	2,380 ft (ISA – to 50 ft AGL)	
Landing distance w/o reverser	2,430 ft (ISA – to 50 ft AGL)	
Range at economy cruise (252 Kts)	1,730 NM (ISA – 45 min reserve)	
Range at maximum cruise (326 Kts)	1,440 NM (ISA – 45 min reserve)	
Standard empty weight	4,629 lbs	2,097 kg
Maximum Zero Fuel Weight	6,032 lbs	2,735 kg
Maximum ramp weight (MRW)	7,430 lbs	3,370 kg
Maximum Take-off Weight	7,394 lbs	3,354 kg
Maximum Payload	1,403 lbs	636 kg
Maximum payload with maximum fuel	891 lbs	404 kg
Maximum Landing Weight	7,024 lbs	3,189 kg
Maximum Usable Fuel Weight (291.6 USG)	1,910 lbs	867 kg

5.

TBM vs Competitor

TBM 900 VS CESSNA MUSTANG

All the data and criteria used to do the comparison between the DAHER-SOCATA's TBM 900 and the Cessna's Mustang, are based on the public information released into the Pilot Operating Handbooks and Flight Planning Guides of the two Aircraft.

Take-off Distances

It is known that the Turboprops have better performance at take-off than Turbofan powered Aircraft. Thus, TBM and Mustang follow the same rule.

TBM 900 provides better take-off distances and load carrying capability than Cessna's Mustang allowing TBM 900 operators to utilize far more airports than the ones flying the Mustang allowing them to fly closer to their intended destination especially at higher altitudes and on hot days.

The published data used considers a dry runway, an obstacle of 50 ft for the TBM 900 and 35 ft for Mustang, even though the results show that in all cases the TBM 900 has better performance, requiring less runway distance to take-off. This performance advantage for the TBM increases in Hot & High conditions. As an example at ISA +20°C from an airport whose altitude is 4,000 ft, the Mustang's MTOW is reduced to 7,500 lbs and to 7,000 lbs at 6,000 ft. This is 300 lbs less load than the TBM 900 which requires respectively 1,430 ft less runway to take-off.

Take-off distance	TBM 900	Mustang	TBM's advantage
SL, ISA, MTOW	2,380 ft	3,110 ft	-730 ft
4,000 ft, ISA +20°C, MTOW	3,200 ft	4,530 ft	-1,330 ft
6,000 ft, ISA +20°C, MTOW	3,550 ft	4,980 ft	-1,430 ft

Speed and Travel Time

DAHER-SOCATA's TBM 900 is the best in the Very Fast Turboprop Class which features speed comparable to those of Very Light Jets with similar travel time and better fuel efficiency.

Jet Aircraft require flying at high altitude in order to have reasonable fuel economy and range. For instance, in order to reach the advertised range data the Mustang must fly at FL410, where its max Airspeed is reduced by 23 KTS, cancelling its speed advantage towards the TBM.

TBM's max speed is close to those of VLJ at almost any altitude. However, more important than the speed itself is the travel time, which is the time needed to travel a distance including all phases of the flight (Climb, Cruise at Flight Level and Descent).

We have analyzed different mission profiles to compare the real operational performance of the TBM 900 and the Mustang. Hereunder are the results (Mission profile based on B&CA Purchase planning flight profile):

MTOW, Max cruise, ISA, NBAA IFR Reserve, 4 persons on board, no wind

Distance (NM)	TBM 900	Mustang	Difference
300	1:01	1:00	+1 min
600	1:59	1:56	+3 min
1,000	3:09	3:16	-7 min
1,200	3:45	-	Stopover needed for the Mustang

Cruise with 4 persons on board, ISA, True Air Speed

Flight level	TBM 900	Mustang	Difference
FL 290	328 kts	342 kts	-14 kts
FL 310	326 kts	341 kts	-15 kts
@ Ceiling	326 kts	317 kts	+11 kts

This analysis demonstrates that the TBM 900 travel time is at the maximum, just a few minutes longer than the Mustang's, with a much better fuel efficiency advantage, as shown below.

Fuel consumption on the trip

Fuel consumption has been calculated based on the same mission profiles.

The results show that for similar travel time, the TBM is able to offer significant fuelsavings in the range of 25% to 30% as compared to the Mustang with both Aircraft traveling at their maximum altitude.
When the Mustang is not able to climb directly to FL410, for instance in the case of altitude restrictions given by ATC, the gap between the two Aircraft is increasing drastically.
Then fuel efficiency of the Jet powered Aircraft can be between 45 to 55% worse than the TBM's.

MTOW, Max Cruise, ISA, NBAA IFR, 4 persons on board, no wind

Distance (NM)	TBM US Gal	Mustang US Gal	TBM's Advantage
300	64	104	38%
800	121	170	40%
1,000	193	258	33%
1,200	204	340	(1 stopover for the Mustang)

Range vs. Payload

The TBM 900 offers excellent range and load carrying capabilities, much better than that of the Mustang and most VLJs.

Max Cruise, ISA, NBAA IFR reserves, at ceiling FL, no wind (pilot exluded from the payload)

Distance (NM)	TBM US Gal	Mustang US Gal	TBM's Advantage
300	1,203	1,155	4%
800	1,100	1,123	10%
1,000	880	828	10%
1,200	653		(1 stopover for the Mustang

The performance chart above shows that the TBM 900 has a significant advantage when considering both Payload and Range capabilities. The TBM 900 offers an extra 300 NM in range and extra payload capability (source B&CA – May 2014).

The TBM 900 can go 30% further carrying up to 18% more payload

Warranty Coverage

	TBM 900	Mustang
Major airframe	7 years or 3,500 hours of aircraft operation	3 years/1,000 hours
Manufacturer's components	5 years/ 1,000 hours	3 years/1,000 hours
Vendor components	2 years/ 1,000 hours	1 year
Standard Avionics	5 years (Garmin)	2 years (Garmin)
Powerplant	5 years or 2,500 hours	3 years/1,000 hours

Summary analysis

Table comparison TBM 900 vs Cessna Mustang

	Strength	Weakness	Similar	Best Performer
Take off Distance	✔			
Block Time / Speed			✔	TBM 900 = Mustang
Block Fuel	✔			TBM 900
Payload	✔			TBM 900
Range	✔			TBM 900
Landing Distance			✔	TBM 900 = Mustang

The table above is self-explanatory. On most of the criteria the TBM 900 delivers a veritable performance advantage over the Mustang.

The TBM 900 offers superior runway performance, payload, range and fuel efficiency while proving essentially identical trip times than the Cessna Mustang over the complete spectrum of mission profiles.

6.

Range Finder


Baffin Bay
Hudson Bay
Prince Rupert
Edmonton
Calgary
Saskatoon
Moosonee
Victoria
Seattle
Olympia
Winnipeg
Quebec
Saint John
Halifax
Washington
Portland
Montana
North Dakota
Minnesota
OTTAWA
Maine
Oregon
Minneapolis
Ver.
N. H.
Idaho
South Dakota
Wisconsin
N. York
Mass.
Wyoming
Michigan
Buffalo
R.I.
Con.
Salt Lake City
Iowa
Chicago
Detroit
Pennsylvania
New York
Sacramento
Nebraska
WASHINGTON
N. Jersey
San Francisco
Nevada
Illinois
Ohio
D. C.
Mar.
Del.
Utah
Denver
Indiana
W. Virginia
kansas City
Colorado
Kansas
Saint Louis
Virginia
California
Missouri
Kentucky
Arizona
Charlotte
North Carolina
Los Angeles
New Mexico
Tennessee
San Diego
Phoenix
Oklahoma
Memphis
South Carolina
Arkansas
Atlanta
Mississippi
PACIFIC OCEAN
El Paso
Dallas
Georgia
Alabama
Jacksonville
Louisiana
Texas
ATLANTIC OCEAN
Chihuahua
Houston
New Orleans
Tampa
Florida
Miami
Gulf of Mexico
HAVANA
Mazatlan
San Juan
Tampico
Merida
Guadalajara
PORT-AU-PRINCE
250 NM
MEXICO CITY
Veracruz
KINGSTON
BELMOPAN
Caribbean Sea
CARACAS
TEGUCIGALPA
GUATEMALA


Managua
San Jose
Panama
Caracas
Port of Spain
Ciudad Bolivar
Venezuela
Guyana
Georgetown
Paramaribo
Cayenne
Suriname
Guyane (Fr.)
Medellin
Bogotá
Cali
Colombia
Quito
Ecuador
Guayaquil
Iquitos
Peru
Manaus
Santarem
Belém
São Luís
Fortaleza
Natal
Recife
Chiclayo
Trujillo
Chimbote
Porto Velho
Brasil
Lima
Cuzco
Salvador
Bolivia
Cuiabá
Brasilia
Arequipa
La Paz
Sucre
PACIFIC
OCEAN
Belo Horizonte
Paraguay
Antofagasta
Rio de Janeiro
São Paulo
Ascension
Curitiba
Porto Alegre
Córdoba
Salto
Mendoza
Rosario
Uruguay
Santiago
Buenos Aires
Montevideo
Argentina
Chile
Bahia Blanca
ATLANTIC
OCEAN


ARCTIC OCEAN
Kara Sea
Barents Sea
Iceland
Reykjavik
Sweden
Finland
Norway
Bergen
Oslo
Stockholm
Helsinki
Tallinn
Saint Petersburg
Arkhangelsk
Russia
Perm
Nizhny Novgorod
Moscow
Omsk
Samara
Astana
Kazakhstan
Atyrau
Donetsk
Kiev
Riga
Vilnius
Minsk
Copenhagen
Den.
North Sea
Glasgow
Dublin
Irel.
U. K.
London
Amsterdam
Neth.
Berlin
Warsaw
Poland
Germany
Leipzig
Brussels
Bel.
Lux.
Prague
Czech R.
Paris
Vienna
Slov.
Bratislava
Munich
Nantes
Berne
Sw.
Austria
Slo.
Hung.
Budapest
Chisinau
Odessa
Romania
Mol.
Bordeaux
France
Ljubljana
Zagreb
Italy
Sarajevo
Bucharest
Bilbao
Cro.
Serb.
Beograd
Bulg.
Mont.
Sofia
And.
Marseille
Black Sea
Casp. Sea
Baku
Tbilissi
Samsun
Erevan
Uzbekistan
Nukus
Bichkek
Almaty
Tashkent
Kyrg.
Porto
Madrid
Port.
Spain
Rome
Napoli
Tirana
Skopje
Istanbul
Ankara
Turkey
Izmir
Turkmenistan
Dushanbe
Taj.
China
Achgabat
Lisbon
Sevilla
Algiers
Tunis
Palermo
Greece
Athens
Valletta
Nicosia
Syria
Leb.
Tehran
Rabat
Tripoli
Mediterranean Sea
Beirut
Damas
Baghdad
Iran
Kabul
Afghanistan
Islamabad
Tun.
Morocco
Jerusalem
Amman
Is.
Jord.
Iraq
Pakistan
Cairo
Kuwait
Shiraz
New Delhi
Algeria
Libya
Saudi Arabia
Kathmandu
Egypt
Al Manamah
Doha
Riyadh
Mascate
Inde
250 NM


Mauritania
Mali
Niger
Chad
Sudan
Arabia
Oman
Yemen
Nouakchott
Tombouctou
Gao
Dakar
Sénégal
The Gambia
Banjul
Bissau
G.-B.
Bamako
Ouagadougou
Niamey
Ndjamena
Nyala
Khartoum
Asmara
Sanaa
Aden
Djibouti
Guinée
Benin
Nigeria
Abuja
Addis Ababa
Ethiopia
Conakry
Freetown
S. Leone
Liberia
Monrovia
Ivory Coast
Yamoussoukro
Ghana
Togo
Accra
Lome
P.-Novo
Cameroon
Douala
Yaounde
Malabo
Central African Rep.
Bangui
South Sudan
Juba
Uganda
Kampala
Kenya
Mogadishu
Nairobi
E. Guinea
Sao Tome
Libreville
Gabon
Congo
Mbandaka
Kisangani
Dem. Rep. Of the Congo
Kigali
R.
B.
Bujumbura
Kigoma
Tanzania
Mombasa
Dodoma
Dar es Salaam
Victoria
Gulf of Guinea
Brazzaville
Kinshasa
Kananga
Luanda
INDIAN
OCEAN
Moroni
Lumumbashi
Luena
Angola
Zambia
Lilongwe
Mozambique
Lusaka
Livingstone
Harare
Botswana
Bulawayo
Beira
Mozambique
Channel
Antananarivo
Port Louis
Madagascar
Toliara
Namibia
Windhoek
Walvis Bay
Botswana
Gaborone
Pretoria
Johannesburg
Maputo
Swa
Mbabane
Maseru
Les
South Africa
Durban
Cape Town
Port Elizabeth
Cape of Good Hope
ATLANTIC
OCEAN
250 NM


Bandar Seri Begawan
Malaysia
Kuala Lumpur
Singapore
Malaysia
Indonesia
Balikpapan
Ind.
Jakarta
Java Sea
Bandung
Yogyakarta
Denpasar
Celebes Sea
Ambon
Banda Sea
Dili
East Timor
Ind.
Papua N. G.
Port Moresby
Honiara
Bairiki
Yaren
PACIFIC
OCEAN
Vaia
INDIAN
OCEAN
Darwin
Birdum
Cairns
Townsville
Coral
Sea
Port Vila
Suva
Alice Springs
Australia
Brisbane
PACIFIC
OCEAN
Perth
Great
Australian
Bight
Adelaide
Canberra
Sydney
Melbourne
Tasman
Sea
Auckland
Wellingto
Christchurch
New
Zealand
Hobart
250 NM


Russia
Perm
Omsk
Astana
Kazakhstan
Irkutsk
Oulan Bator
Okhotsk
Sea of
Okhotsk
Harbin
Urumqi
Almaty
Bichkek
Tashkent
Kyrgyzstan
Uzbekistan
Dushanbe
Tajikistan
Turk.
Sapporo
Vladivostok
Shenyang
N. Korea
Beijing
Tianjin
Pyong-Yang
Sea of
Japan
Sendai
Séoul
S.
Korea
China
Japan
Tokyo
Osaka
Kabul
Islamabad
Afghanistan
Xi'an
Nanjing
Nagasaki
Shanghai
Chengdu
Pakistan
New Delhi
Nepal
Kathmandu
Bhutan
Lucknow
Thimphu
Bangladesh
East
China
Sea
Taipei
Dhaka
Guangzhou
India
Kolkata
Myanmar
Macau
Shantou
Hong Kong
Hanoï
Laos
PACIFIC
OCEAN
Mumbai
Vientiane
Arabian
Sea
Rangoon
Thailand
South
Vietnam
Bay of
Bengal
Bangkok
China
Manille
Bangalore
Chennai
Cambodia
Sea
Phnom Penh
Philippines
Ho Chi Minh City
Sri
Lanka
250 NM
Colombo
Zamboanga
Bandar Seri Begawan
Malaysia
Brunei
Kuala Lumpur

7.

World Class Support

The TBM 900 aircraft is designed, built and tested to operate safely and reliably throughout the world. When servicing, inspection and/or maintenance is required, service panels and doors are conveniently placed to enable technicians to access to all systems and complete necessary inspection/servicing/repair actions in the minimum time possible using standard FAA or EASA repair procedures.

STANDARD WARRANTIES

DAHER-SOCATA offers one of the best warranties in the industry as follows:

Airframe (excluding systems, major components and consumables‡)	7 years or 3,500 hours of aircraft operation
Systems	2 years or 1,000 hours
PT6A Powerplant	5 years or 2,500 hours of aircraft operation
Hartzell propeller	2 years or 1,000 hours of aircraft operation
Garmin Avionics	2 years

2014 SOCATA EXTENDED WARRANTY PROGRAM

With every 2014 TBM 900, DAHER-SOCATA will provide customers its extended warranty program. The Socata extended warranty program enhances Socata's standard warranty for the items below as follows:

Avionics: All Garmin equipment, L3 WX500 Stormscope, RA4500 radar altimeter and KN63 DME	5 years
Systems: Flap Actuators, Fuel Unit, Gauging System, Oxygen System, Bleed Air System, Cabin Pressure control System, Air conditioning System, Landing Gear and actuators, Mechanical fuel pump, Hydraulic unit, Vaccum System, Windshield, Flight controls actuators, Electrical Power unit, Starter Generator, Standby altimeter & Airspeed indicators, Torque & Oil pressure Transducers, Overspeed governor	5 years or 1,000 hours
Hartzell Propeller	5 years or 1,000 hours

In addition a Pratt & Whitney Canada Eagle Plan can be purchased from DAHER-SOCATA providing a warranty extension to 7 years or 2,500 hours for the TBM powerplant.

2014 SOCATA HIGHLY EXTENDED EXCLUSIVE MAINTENANCE PROGRAM

With every 2014 TBM 900, DAHER-SOCATA will provide customers its Highly Extended Exclusive Maintenance Program (HEEMP) as part of the purchase package.

This exclusive program provides the initial retail owner of a TBM 900 with complimentary scheduled maintenance (including annual inspections) for the first five years or 1000 hrs of ownership (which ever comes first).

The HEEMP program covers all scheduled maintenance costs (with the exception of consumable items). In addition, it provides comlimentary CAMP computerized maintenance tracking and follow-up to the initial retail owner for the first five years of ownership (see below).

Computerized maintenance follow-up with CAMP

Proper maintenance tracking and planning is the key to operating an aircraft safely and efficiently.

The CAMP Maintenance Management service allows you to accurately track and predict all the maintenance requirements of your aircraft. CAMP will implement a customized aircraft recommended maintenance schedule (RMS) for your aircraft. The RMS for your TBM will evolve based on changes Socata's maintenance recommendations, service bulletins etc. CAMP will keep track of all these changes and how they apply to your aircraft making the job of planning your aircraft's maintenance much easier. The program provides online access to your maintenance records allowing you to identify upcoming maintenance events regardless of your location..

MAINTENANCE PROGRAM

In 2013 DAHER-SOCATA released a major update to the TBM recommended maintenance program that increased inspection intervals based on Socata's experience with the TBM program.

Recommended maintenance intervals are now 200 hours or 12 months (whichever occurs first.) The complete TBM maintenance program is described in the TBM 900 Maintenance Manual (MM). The TBM 900 MM is available free on-line to owners and operators of the aircraft at www.mysocata.com, or via the innovative "MyTBMDocs" iPad application which allows you to carry automatically updated TBM maintenance, parts and pilot's information manuals with you wherever you fly.

If, after reviewing our maintenance documentation you have questions or concerns please don't hesitate to discuss these with your aircraft's maintenance provider or contact Socata's Customer Support at any time.

While Socata recommends that all maintenance be carried out via a Socata approved service center, all inspection actions can be accomplished by any certified mechanic using DAHER-SOCATA provided inspection checklists.

DIRECT OPERATING COSTS WITH HIGHLY EXTENDED EXCLUSIVE MAINTENANCE PROGRAM (HEEMP)

	FIRST 5 YEARS OWNERSHIP UNDER HIGHLY EXTENDED-EXCLUSIVE MAINTENANCE PROGRAM (1)				
	Reference	Quantity per hour	200 Hrs per year	400 Hrs per year	Personal calculation
Fuel (2)	$5.85 per Gallon	60 gallons per hour	$351.00	$351.00	
Oil	$15.00 per Quart	Total per hour	$0.75	$0.75	
		Total	$351.75	$351.75	

(1) Please refer to Terms & Conditions of the Highly-Extended Exclusive Maintenance Program
(2) Based on B&CA Monthly Fuel Survey. Average price for Jet A

DIRECT OPERATING COSTS WITHOUT HIGHLY EXTENDED EXCLUSIVE MAINTENANCE PROGRAM

(A) 2014 TBM 900 OWNERSHIP

	Reference	Quantity per hour	200 Hrs per year	400 Hrs per year	Personal calculation
Fuel	$5.85 per Gallon (1)	60 gallons per hour	$351.00	$351.00	
Oil	Oil $13.65 per Quart 1 Quart every 15 Hours		$.0.75	$0.75	
Scheduled maintenance	Labor $100 per hour	0.75 hour of labor per Flight hour	$75.00	$75.00	
	Parts	$20.00	$20.00	$20.00	
Scheduled Calendar Items	Landing gear (2)		$5.00	$5.00	
	Gear actuators $10,000 per unit		$15.00	$7.50	
	Propeller Overhaul $10,000		$8.33	$4.16	
	Hot Section Inspection $15,000		$8.57	$8.57	
	Engine Overhaul $260,000		$74.29	$74.29	
Consumable parts (e.g tires & brakes)	Parts and labor		$7.17	$4.45	
		Total per hour	$565.11	$550.72	

(B) INDIRECT COSTS OF TBM 900 OWNERSHIP

	Reference	Quantity per year	200 Hrs per year	400 Hrs per year	Personal calculation
Insurance (4)	$3,711,478.00	$37,114.78	$185.57	$92.79	
Hangar	$9,600		$48.00	$24.00	
Training, Charts, Misc	$3,500		$17.50	$8.75	
Total cost Owner flown (A+B)			$816.18	$676.26	
Professionnal Pilot (5)	$65,000	Average salary	$325.00	$162.50	
Total cost with Pilot			$1,141.18	$838.76	

Total Cost per Hour reflects a 2014 TBM 900 not supported by Exclusive Maintenance Program and not protected by Extended Warranties - (1) Based on B&CA Fuel Survey (January 2014)(2) Applies to Landing Gear on Long Life Program - (3) Source: Hartzell Propeller - (4) Average Industry Cost: 1% Hull Value per year - (5) Average Salary: Professional Pilot Professional Pilot magazine – June 2013 Salary Survey (5) Survey
www.mysocata.com

GLOBAL SUPPORT

Take a powerful, reliable engine, a rugged airframe, advanced aerodynamics, a state-of-the-art glass cockpit. Combine with global support services, mature technologies, the reputation of DAHER-SOCATA, and a 24-hour hotline.

Result: all TBM aircraft deliver outstanding dispatch reliability, with the best safety record in their class.

DAHER-SOCATA has been building general avaiation aircraft for a century. This means we know how to make the correct technical choices. We fine-tune our designs for the perfect combination of performance, reliability and cost-effectiveness.

When visiting remote locations, you're not alone. Our tech support field staff is on-call 24 x 7. Socata Support representatives are always available answer your call and to help you decide on the best course of action. Within addition to online and cell phone support, our 27 distributors and service centers, DAHER-SOCATA gives you the most complete service package in the industry.

You can get the full list of TBM Authorized Service Centers with the latest information going to our website - www.tbm.aero/Support-Network

FIELD SERVICE REPRESENTATIVES

DAHER-SOCATA Field Service Representatives regularly visit DAHER-SOCATA's network of distributors and service centers to provide them with the latest technical information, advice and assistance. Field representatives are available 24/7. They provide direct and on-site technical support to assist customers and operators. They regularly visit the service centers to provide training and proper feedback to the factory with in-the-field experience. When a factory repair solution is needed, they will insure proper interface with the factory for the best quality and safety before returning an aircraft into service.


Elliott Aviation
Muncie
Columbia
Keystone Aviation
Cutter Aviation
Socata North America
Jet Match
Algar Aviation
IAS
DAHER-SOCATA
: Area Service Center
: Distributor and Area Service Center

TBM TRAINING

Training in the USA

In the Americas, all initial TBM flight training is provided through DAHER-SOCATA's training partner, Simcom International. Simcom utilizes two Level 5 flight training devices which are based on real TBM cockpits. which are either EFIS/GNS 530 or G1000 equipped. Simcom's location on the U.S. south Atlantic coast (Orlando, FL.) centrally positions the simulator for TBM 850 operators throughout North America, as well as for customers in Latin and Central America.

Simcom also provides factory approved maintenance training for the TBM family.

The G1000 TBM flight training device (FTD) has a high-resolution visual system and is configured with the TBM Garmin G1000 integrated avionics suite.

The TBM G1000 FTD's visual system uses a Redifun RASTER XT image generator witha 172-deg.-wide field of view. This advanced 60-Hz visual system offers day/ dawn/ dusk/night or continuous time of day operation.

www.simcom.com

TBM 900 Initial training consists of the following:

a. Ground school training, which includes TBM systems knowledge tests;
b. FTD training;
c. In-aircraft training;
d. Flight review to Private Pilot Practical Test Standards and an Instrument Proficiency Check;

Based on the new TBM pilot's previous pilot experience and competency, training will be conducted using one of three training tracks.

Track one - Pilots with a minimum of 500 hours, but no turbine time:

- Six days of ground school with written tests;
- A minimum of two days of FTD-based training;
- 20 hours in-aircraft training or 15 flights with a flight review and IPC

Track two - Pilots with 1,000 hours and turbine experience:

- Six days of ground school and FTD based training;
- A minimum of two days FTD-based training;
- A minimum of 10 hours in-aircraft training or 8 flights with a flight review and IPC.

Track three - Pilots with existing type ratings:

- Six days of ground school and FTD-based training;
- In-aircraft training and a final check ride.

Trainees will be required to perform check-rides to Private Pilot and Instrument Practical Test Standards in IMC simulated conditions for successful completion of the Training.

Depending on the skills of the trainee additional flights with a Safety Pilot may be required to complete the training.

Training in Europe

All training requests outside the Americas are handled by the Authorized Training Organisation called Airways Formation, based at Agen Airport (LFBA), France.

At Airways, the training is provided "in aircraft" (using your own or a rented TBM).

Airways is approved by EASA to award the TBM SET (Single Engined Turboprop) Class rating

Training is divided in two specific areas:

Ground Training:

- Theoretical training (3 days to 4 ½ days depending on TBM type) concluded by a written exam (75% pass mark, 50 MCQ).
- If G1000 training is required, a Garmin System Trainer (GST) is used top provide initial training and a skill test is also performed to confirm knowledge of the pilot on the Garmin system.
- Trainees will also receive a DVD/handbook for self-learning/training beforehand.

In Flight Training:

- Practical training (flight training with a minimum of 8 hours in flight covering all aspects from low-speed handling to IFR flight).
- At the end of the flight training a 'Check ride' will be performed to confirm pilot's knowledge and flying skills with the TBM.

Whatever the license origin or skill level of the pilot is, the training will be performed following the approved syllabus (send upon request by Airways).

Contact Caroline Van Berkel, Customer Relations
Email: c.van-berkel@socata.daher.com
or +33 5 62 41 77 37
or
Airways to schedule your training possibilities
Email: contact@airways-formation.com

tel: +33 (0) 5 53 68 18 18
http://www.airways-formation.com/

8.

Insuring your TBM

Tom Chappell, Chairman and CEO of Chappell, Smith & Associates, Inc., parent company of CS&A Insurance.

He is a graduate of Middle Tennessee State University and a member of numerous local and national professional organizations, including the Aviation Insurance Association (AIA). His articles have been published in insurance and aviation trade publications for more than three decades. He has served on various corporate boards and insurance company advisory councils.

He was honored to serve on an advisory panel for the National Academy of Sciences advising NASA on its "Small Aircraft Transportation System Initiative".

Tom is considered one of the industry's foremost authorities on aviation insurance, having been in this specialized field for over 39 years. He has distinguished himself in the area of aviation risk and safety management and is recognized as an authority on business development. He works extensively with Fixed Base Operators (FBO), charter operators, manufacturers, and maintenance organizations. He is respected as a guest speaker in the area of aviation insurance and risk management throughout the United States.

How many full line aviation insurance companies operate in the United States?

The aviation insurance market place is a constantly changing register of insurance underwriting companies. Currently, January 2014, there are a total of sixteen primary aviation underwriting facilities. Of these, one is AVEMCO, a customer direct underwriter and the only aviation underwriting company in the U.S. that is not represented by Chappell Smith & Associates, Inc. (CS&A Aviation Insurance). The other fifteen have carved out various market segments and have varying capacities in the amount of hull and liability insurance they can or will underwrite. Although most underwriters look favorably toward the TBM, some are more enthusiastic and have a better understanding of the aircraft and the owner/operator pilot. This causes a wide variation in underwriting approaches and rating methods.

How does each of the underwriting facilities treat the TBM?

The insurance marketplace has grown substantially over the last few years. Most underwriters now have the capacity to write the physical damage coverage for the more expensive aircraft such as the TBM. Of the fifteen full line markets, thirteen can easily handle the $3.5 million required to insure a new TBM. Having the capacity, however, does not translate to appetite. Some underwriters are more resistant to a single pilot, owner/operator in a high performance aircraft than to the aircraft itself. The question is not how many primary underwriters operate in the U.S. More importantly, how many aggressively underwrite the owner/operator in the TBM. At this snapshot in time, the TBM underwriting community consists of eight to nine underwriting facilities. This is a major improvement over the past fifteen years.

On the liability side, we have never had it so good. In the early days, we had to struggle to get a transitioning pilot a liability limit of more than $1 million restricted to $100,000 per passenger seat. How times change. In today's market place, a transitioning pilot can easily purchase a liability limit of $1,000,000 (and often $2,000,000) including passengers. An experienced transitioning pilot can often qualify for $5,000,000 liability limits. After the transition process is complete and the owner/operator has some experience in the aircraft, some underwriters will quote a $10,000,000 including passengers limit. Responsible limits of liability are important. The good news is the cost of buying the higher limits has become very affordable in today's underwriting market.

Each underwriting facility has their risk preferences. Some will readily underwrite a transitioning pilot while others will only quote the highly experienced owner/operator.

We are seeing more and more senior pilots. Where pilot age was once a major problem, today we are insuring pilots well into their seventies. Again, some underwriters respond favorably to the senior pilot while others prefer to write those between 25 and 65.

Is excess liability available?

In many underwriting situations, excess limits of liability are available if the primary insurance company is unable to meet the needs of the insured. The excess underwriter approaches a risk in much the same way as a primary underwriter. The better the pilot and aircraft, the easier it is to insure higher limits of liability at a reasonable price. There is one major exception. The higher the primary limit of liability, the cheaper the excess limit will be. As an example, the excess underwriter realizes that his exposure to a loss is less if the primary limit of liability is $5,000,000 CSL than if it is only $1,000,000. This affects the price and availability of coverage.

In today's insurance climate, excess limits are in less demand because of the increased availability in the primary layer. A qualified owner/operator often can qualify for a $5,000,000 to $10,000,000 limit of liability in the primary layer making it unnecessary to enter the excess market place. In addition, the overall premium is much more affordable when you can avoid an excess policy but achieve the limit necessary in the primary layer.

Pilot Qualifications

The TBM has a favorable reputation with insurance underwriters. This is mainly the result of the support the aircraft has received. DAHER-SOCATA, the TBMOPA Safety Committee, the DAHER-SOCATA distributors and CS&A Aviation Insurance have worked tirelessly to develop additional pilot safety training programs (in addition to the required annual training) leading to the safe operation of the TBM fleet. This additional training is so powerful that many of the underwriters reward this extra effort by returning a portion of the physical damage premium to the TBM owner/operator at the end of their annual policy periods. The participating underwriters refer to this as a "No Claims Bonus on Renewal". In order to qualify, each pilot must receive a certificate of completion for the additional underwriter approved TBMOPA training, have no claims during the policy period, and (in most cases) renew with the writing company. How much can this bonus amount to? In most cases, the "No Claims Bonus" is 10% of the physical damage premium and averages around $1,000. How is that for underwriter confidence?

The pilot's basic qualifications and flying experience is the primary factor the underwriter will consider when reviewing a risk. What is the pilot's total pilot-in-command time, what is his turbine time, etc? If the pilot has over 500 to 600 hours total PIC time and has a private or commercial and instrument rating, he should be insurable. If he has time in high performance aircraft and some turbine experience, the job gets easier and the premiums improve. If he is transitioning from the Malibu, Bonanza, or other high performance aircraft, insurability is good. In short, many underwriters view pilots transitioning from the high performance aircraft to the TBM favorably. (Pilots with less than the 1000 hours total time can be insured if they receive acceptable transition training.) Depending upon a pilot's experience, the underwriter may require dual instruction in addition to the manufacturer's recommended initial ground and flight school. The pilot offering the dual would be expected to be knowledgeable not only in turbine aircraft but in the TBM as well. Realizing the market potential for the transitioning pilot to move into the high performance TBM 700 and now the TBM 850, the DAHER-SOCATA distributors began to develop a pre-SimCom, pre-simulator transitioning program. The idea is to have the transitioning pilot fully competent in the aircraft before going to school. It is believed that a pilot's time is much more beneficial in school and in the simulator if he is oriented to the aircraft in advance.

More highly skilled pilots, those with prior turbine experience can transition with much less transition training.

Thanks to DAHER-SOCATA, the folks at SimCom and Turbine Solutions (TSI) East and West Coast, as well as the sponsoring DAHER-SOCATA distributors, the TBM owner/operator has one of the best initial and recurrent training programs available for any general aviation aircraft.

By continuing to educate and communicate with the aviation underwriter about the TBM and the available training, we have been able to encourage an increasing enthusiasm among the underwriting community. CS&A, TSI, and SimCom have made every effort to insure that the underwriting community understands the TBM. I'm not talking just a brochure and a poster, but hands on experience, some simulator time and some right seat time with an experienced instructor. In addition, we offer a face-to-face briefing on the systems and emergency procedures for this aircraft and a true feel of the ease in transitioning. Only then can an underwriter decide for himself what is a good risk or a good transitioning plan.

It is imperative that the TBM retain its good reputation. DAHER-SOCATA, SimCom, and the DAHER-SOCATA distributors have done their part introducing the aircraft to the insurance industry. The rest may be up to you in conducting safe operations. If, in the years to come, our losses remain in check, I look forward to a great experience with this champion. There is no question, the underwriting community is hoping for success. Keep in mind, the ability to insure economically helps maintain the value of the aircraft and the desire to own the TBM.

Tom Chappell
tchappell@chappellsmith.com
CS&A - http://www.aviationinsurance.com/

9.

Testimonials

Anutin Charnvirakul

TBM 850 SN 624

I hold an Industrial Engineering degree and have been running my family business since 1990. My family is a major shareholder of a publicly listed construction company in Thailand specializing in infrastructure, mass transit, power plant, petrochemical industry, etc. After a smooth transition of my business activity to my successor, I entered politics in 2004 and held political positions as Deputy Minister of Commerce and Deputy Minister of Public Health under the premiership of Thaksin Shinnawatra. At present I'm a leader of Bhumjaithai (Pride of Thailand) Party, a third largest political party inThailand's Parliamentary system. Apart from my political activity nowadays,I am a private investor and a self-employed person. As a pilot, I'm currentlyIR rated with a CPL license issued by Thai DCA. I also hold an FAA license asPPL on single engine-land. My top priority always goes to my family and nothing else. My flying usually is within Thailand and Southeast Asian countries namely, Singapore, Malaysia, Vietnam, Laos, Myanmar and Cambodia. Though theTBM 850 isn't as fast as commercial jet, I'd very much prefer flying by myself.I normally fly solo on domestic flights and would always have a safety pilot on international flights. The point to point time is by far still shorter than going by commercial airliners.I always find all airports that I ever landed very favorite. Every airport has its own distinctive characteristic.I love French, Italian and Japanese foods. In Paris I always dropped in La Tour d'Argent for my favorite pressed duck.The best flight for me up till now was and still is the ferry flight in my TBM 850 from Tarbes to Bangkok in July 2012. I flew with Gilles Bellot who had given me a very valuable flight lessons and experiences. The 3 days and 6 stopovers have been an unforgettable memory of my first intercontinental flight.In addition, I never regret my decision to owning a TBM 850. I have beengetting a very good support and knowledge from Socata's personnel especially after I brought the plane to my home country. The after sale service and attention I have from Socata has been a sweet dream to me. There were several occasions that my aircraft was designated AOG and I believe what all aircraft owners would feel when their planes are grounded. Socata would always help to get my plane back to the air as quick as they could. They would not hesitate to dispatch technicians or engineers to my home base when my plane required special attention and care. In my view, this is the most important factor for an aircraft owner that the manufacturer always stands by his side at all time.

Larry Glazer

TBM 900 SN 1003

Real Estate developer and President of TBMOPA, Larry Glazer, started flying nearly 30 years ago when he was looking to buy a business in Vermont.

"I was looking at 8 hours' drive, followed by 8 hours' work and 8 hours' drive back. An attorney friend offered to fly me in his Cessna plane and it took 45 minutes to get there. I was impressed.

"The next day I paid $5 for a trial flight at our local airport. I came home and told my wife was taking up flying and I signed up for lessons the same week."

The dynamic CEO of Buckingham Properties now uses his brand new TBM 900 for a combination of personal and business trips, travelling between Lakeland Fl. and Naples Fl. with many additional trips to NYC, Chicago and Boston for business.

As a real estate developer with holdings in Florida and new projects set to start in several other states Larry Glazer find that the speed and reliability of his TBM is a real asset.

Larry's wife, Jane, is owner and president of QCI Direct, the catalog and internet marketing company so they travel to trade shows and vendors across the country.

"Our TBM has helped both our businesses to prosper and is directly responsible for my ability to grow my company. We can work on deals quickly and respond efficiently. It has allowed me to expand my company in a way that would have been impossible without it", says Larry.

"The TBM gets us where we need to go. It's very flexible: range, short fields, all weather, and we can be there before the next guy."

Leisure trips enjoyed by the couple in their TBM include Europe, the Arctic Circle, Mexico, Caribbean, Bahamas, and wing camping in Alaska.

In 2001 he flew as part of the Socata organized trip to Paris and Tarbes with many stops along the way. "It is a trip I would recommend to all TBM owners", he says.

Larry's ultimate dream trip would be to take a leisurely three months to fly round the world. "I'd love to fly round the world in my TBM, stopping everywhere, especially China and Japan," he says.

As the chairman of the TBM Pilots and Owners Association, TBMOPA, Larry Glazer's goal is simple: to bring together all members of the TBM family.

"We are working to engage more members of the TBMOPA organization to make sure we're all travelling in the same direction. Board members are now responsible for specific tasks and we are working to improve the quantity and quality of our communications," says Larry.

According to Larry, good things take time to achieve and things to work through – whether it's flying or running a business or the TBMOPA.

"My motto is don't quit, keep plugging away" he says.

Under his guidance, the TBMOPA is working hard to successfully bring together owners, pilots, DAHER-SOCATA, training centers and service centers with the ultimate aim of producing better and safer pilots.

University of North Carolina

TBM 700C2 SN 334 & TBM 850 SN 356

"The University of North Carolina Medical Air Operations, usually known as Medical Air was created in 1968 as the flight department of the university. Based at their own terminal at Raleigh-Durham International airport, Medical Air operate a fleet of six aircraft, 4 Beechcraft Baron 58 and of course two TBMs. The first one, a 700C2, was delivered in March of 2011 and the TBM 850 in February 2012." Our main mission is transporting doctors from our hospital to clinics in underserved areas of the state. We also fly University administrators and coaches from athletics for recruiting." Explained Gordon Kramon, Medical Air's Director of Operations.According to UNC website, in 2011-2012, Medical Air transported 1,975 passengers to more than 75 destinations. These include North Carolina's nine Area Health Education Centers (AHEC) Program centers, community hospitals, health departments, and universities. This service makes it possible for the faculty to reach very remote sites in the state on a daily basis while maintaining a full slate of professional activities. Medical Air has logged approximately 20 million passenger miles since 1978. " We do not have a typical trip. " precised Gordon Kramon. "One day our TBMs might fly 4 hospital administrators from Raleigh-Durham (RDU) to Asheville, 180 nautical miles. The next day we may be taking 3 coaches from RDU to Houston, about 900 nautical miles."The flight department is staffed with eleven persons. Six pilots holding Airline Transport Pilot Certificates who have flown an average of 10,000 hours in both civilian and military aviation. A team of three full-time certified mechanics maintain the aircraft's readiness, performing eight inspections per aircraft per year and other routine maintenance procedures in a modern, fully equipped hangar. In addition, two experienced air transportation coordinators schedule flights for Medical Air passengers. About the choice of the TBM, Gordon Kramon explained that speed enable the department to cover most of the trips in a respectable time and the cost per hour is reasonable. He ranked speed, Economy of operation and Reliability.as the top three qualities of the TBM. "The TBM was an easy transition for our 6 pilots." He adds.His most memorable flight was a flight back to RDU from Chicago O'Hare. "At 30,000 feet, doing 380 knots and looking down at the storms. I kept saying "it does not get any better than this"." "Our two TBMs have proven to be the perfect airplanes for the University of North Carolina. They are fast enough to do all of our missions well. They have the speed to fly into the busiest airports, and the capability of going into a 2350 foot runway when needed. The passengers love the comfort of the cabin. The pilots love the way they fly. Their reliability has been nearly flawless. The cost of operation is easily justified when compared to commercial travel. I just have to say that after 41 years of flying, these birds still "wow" me…." He concluded

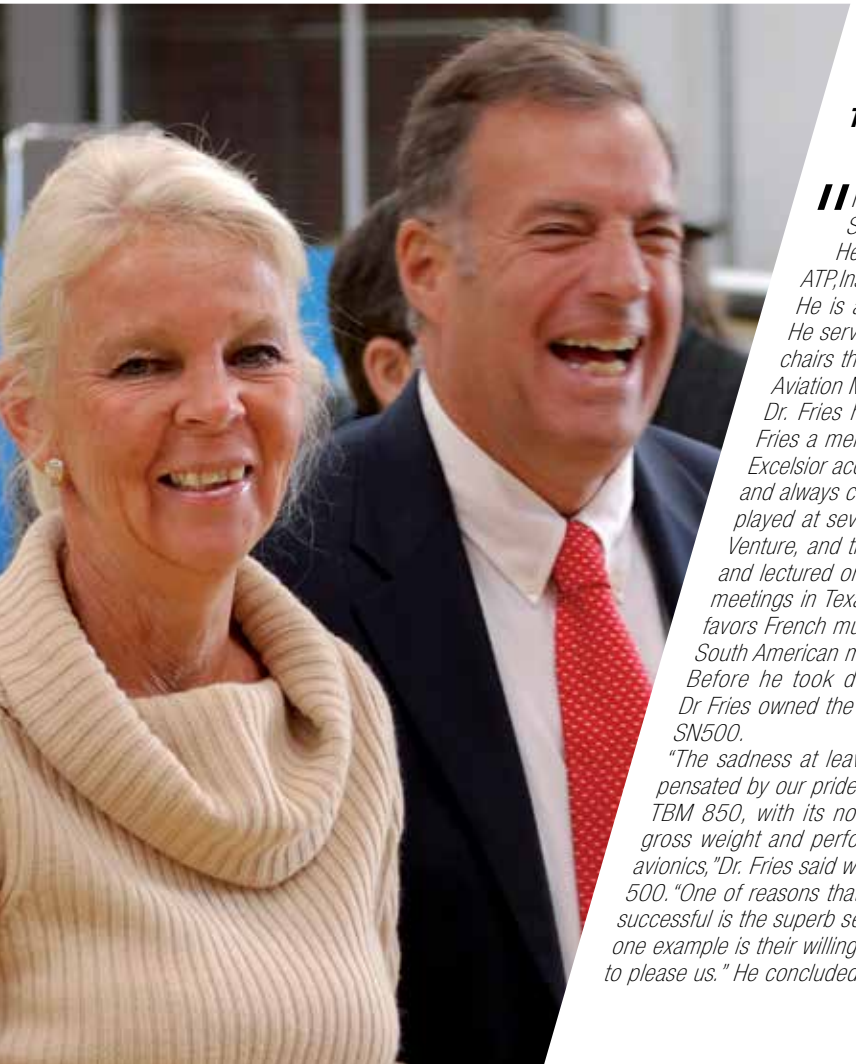

Dr. Ian Blair Fries and Susan Fries

TBM 900 SN 1012

"Medical Examiner. He began flying while in the United States Air Force, where he served as flight surgeon. He soloed in 1975, and currently flies a TBM. He holds ATP,Instrument Flight Instructor, and LearJet 35/36 ratings. He is a recognized aviationwriter and frequent speaker. He serves on the AOPA Air Safety Foundation Board,co-chairs the AOPA Medical Advisory Committee, and is the Aviation Medical Consultantfor the Teamsters Local 747. Dr. Fries has logged more than 5,000 flight hours. Dr. Fries a member of the Flying Musician Association plays Excelsior acoustic and Roland electronic piano accordions, and always carry an accordion or two in his TBM. Ian has played at several aviation venues including the EAA AirVenture, and the Cannes France Airshow. He has played and lectured on the "Accordionist's Hand," at accordion meetings in Texas, New Jersey, Florida, and Virginia. He favors French musette, popular American standards, and South American music from the early1900's.

Before he took delivery of his brand new TBM 900, Dr Fries owned the TBM 700 SN153 and the TBM 850 SN500.

"The sadness at leaving our faithful TBM 700 is compensated by our pride and pleasure in receiving the new TBM 850, with its notable improvements that include gross weight and performance increases, and the new avionics,"Dr. Fries said when he took delivery of TBM SN 500."One of reasons that DAHER-SOCATA has been so successful is the superb service given to customers. Just one example is their willingness to customize the aircraft to please us." He concluded.

Warwick and Katrina Hawksworth

TBM 850 SN 521

"Warwick and Katrina Hawksworth of Capstone Financial Services accepted theirbrand new TBM 850 in 2010. Their independently-owned and operated organizationwas formed in July 2002 and has rapidly grown to become one of Australia's leadingfinancial planning licensees. "We selected the TBM 850 after several years of marketing research, which determined that DAHER-SOCATA's very fast turboprop was the best in speed,low operating costs and short-field operations," Hawksworth said. "A meeting with DAHER-SOCATA representatives at the 2009 Avalon Air Show ensured usof the company's commitment to support and reliability."Hawksworth flew his new TBM 850 from DAHER-SOCATA's production facility inTarbes, France to Melbourne, Australia with SOCATA pilot Gilles Bellot. This trip ofmore than 10,000 naut. mi. was accomplished in 37 hours, with several stopovers. Capstone Financial Services provides its financial advisers with one of the broadestapproved product lists in the Australian market. Starting with an initial five offices, thecompany has more than 70 locations in Australia today. This fast growth generatesa significant travel requirement across Australia from its Melbourne headquarters, which ultimately created the need for a new aircraft.

Robert Kowalczyk

TBM 850 SN 547

"This Sat Film owner and pilot belongs to the new generation of self-made entrepreneurs in Poland. The 46-year-old Kowalczyk graduated as an historian and created Sat Film 18 years ago from scratch. The company now counts 60,000 subscriptions to its cable, telephone and internet services. In the next step Sat Film is anticipating a license for mobile phone services. Obtaining a pilot's license was dream come true for Kowalczyk, and he started flight training in 2004. While preparing for his instrument rating in 2007, he decided to order a very light jet to extend his operations all over Europe. "During my instrument rating training course, I realized the very light jet couldn't land on the short runways close to my final destinations, and this would add travel times to my typical trips," he explained. "So I looked for another airplane."Ultimately, he found that the TBM 850 very fast turboprop aircraft, which was exactlywhat he was looking for in terms of speed, range and operating efficiency.

John Giddens

TBM 850 SN 553

"John Giddens founder of Hallin Marine, a Singapore-based world-class marine and undersea installation contractor, purchased his TBM 850 in 2010 and got it deliveredearly in 2011. His company works mainly for the offshore oil, gas, and renewable energy sectors. Since its creation, the company expanded internationally, was listed on the London Stock Exchange in 2005, and then acquired by Superior Energy of the U.S. in early 2010. Giddens continues as chief executive of the expanding Hallin group."The TBM 850's speed and endurance enabled us to get so much out of the delivery trip from Europe to Singapore, and to enjoy more time in the places we visited along the way," Giddens explained. "It performed superbly throughout, and we had absolutely no maintenance problems in hundred hours of flight since taking delivery in Tarbes. I am really looking forward to flying the TBM 850 in Southeast Asia: it will greatly extend my range and the opportunities for business and pleasure flying from Singapore. Operating on JetA1 fuel and providing good reliability, the TBM 850 does so at a reasonable operating cost."On the picture Ng Yeow Meng and his wife with John Giddens.

Wei Chen

TBM 700A SN 30

Wei Chen, a Chinese citizen living in Memphis, Tennessee, accomplished a 10-weekaround-the-world trip in 2011 with stopovers in 40 cities and 21 countries. Weideparted Memphis on May 22, and retuned back home in August. This flight was supported by several organizations, including the Aircraft Owners and Pilots Association (AOPA) and Greater Memphis United Chinese Association (GMUCA).Many firsts were accomplished during the trip:• 1st flight around the world for a Chinese pilot,• 1st general aviation flight approved to fly across China,• 1st pilot to land a single-engine aircraft at Beijing International,arriving from Hong Kong. The owner of a Memphis-based steel trading company specializing in business between the United States and China, Wei came to the United States in 1996 to earn an MBA at Memphis University. He began learning to fly in 2007.


Mine

10.

Contacts

Here's the list of your main contact within our network which were accurate at the time to print. To find the full list with the latest information go to our website

AUTHORIZED DISTRIBUTORS

North America

- *Subsidiary SOCATA North America*
- *Direct sales offices*
- *Distributors*
- *ASR*
- *Service Centers*

Contact details were accurate at the time to print. Please check the latest on our website - www.tbm.aero

North America Sales & Distribution Network

USA & Canada

SOCATA North America, Inc.
Hollywood North Perry Airport (HWO)
7501 S. Airport Road
Pembroke Pines, FL 33023

Contact: *Michel Adam de Villiers*
Tel. +1 (954) 893 1414
Fax +1 (954) 964 0805
Email: m.de-villiers@socata.daher.com

Florida

SOCATA North America, Inc.
Hollywood North Perry Airport (HWO)
7501 S. Airport Road
Pembroke Pines, FL 33023

Contact: *Chad Leeward*
Tel. +1 954 893 1415
Cell. +1 954 612 1956
Email: c.leeward@socata.daher.com

Mississippi, Alabama, Georgia, South Carolina, Tennessee, North Carolina

SOCATA North America, Inc
Mike Sarsfield
Peachtree Dekalb Airport (PDK)
1951 Airport Road, Suite 120
Atlanta, GA 30341
Tel. +1 (770) 458 2425
Cel. +1 (770) 335 4745
Fax +1 (678) 807 2912
Email: m.sarsfield@socata.daher.com

Texas, Louisiana, Oklahoma, Arkansas, Kansas, Missouri

Cutter Aviation, Inc
David Crockett
San Antonio International Airport, Inc. (SAT)
367 Sandau Road
San Antonio, TX 78216
Tel. +1 (210) 340 6780
Fax +1 (210) 340 8804
Email:
www.cutteraviation.com

New Mexico, Arizona, California, Nevada, Utah, Colorado

New Avex, Inc
New Avex, Inc.
Camarillo Airport (CMA)
205 Durley Avenue, Suite A
Camarillo, CA 93010
Tel. +1 (800) 475 1057
Tel. +1 (805) 389 1188
Fax +1 (805) 389 3323

Contact: *Terry Winson*
Cellphone: +1805 312 5005)
Email: terrywinson@newavex.com
www.newavex.com

Oregon, Washington, Montana, Idaho, Wyoming

Northwest Aircraft Sales

Aurora State Airport (UAO)
14337 Kell Rd. N.E.
Aurora, OR 97002
Tel. +1 (866) 218 7900
Tel. +1 (503) 678 6070
Fax +1 (503) 678 6071

Contact: Brian Jones
Cellphone: (1 801 550-8444)
Email: bjones@maslc.com
www.nwaircraft.com

North Dakota, South Dakota, Nebraska, Minnesota, Iowa

Elliott Aviation

Flying Cloud Airport
13801 Pioneer Trail
Eden Prairie, MN 55347-2617
Tel. +1 (800) 541 9110
Tel. +1 (952) 944 1200
Fax +1 (952) 944 8614

Contact: Todd Jackson
Cellphone: 1 612 382-0386)
Email: tjackson@elliottaviation.com
www.elliottaviation.com

Wisconsin, Illinois, Indiana, Michigan, Ohio

Muncie Aviation

Delaware County Airport (MIE)
5201 Walnut Street
Muncie, Indiana 447303
Tel. +1 (800) 289 7141
Tel. +1 (765) 289 7141
Fax +1 (765) 289 0145

Contact: Martin Ingram
Tel: 765 749 2735)
Email: martin@muncieaviation.com
www.muncieaviation.com

Kentucky, West Virginia, Virginia, Pennsylvania, New York, Vermont,New Hampshire, Maine, New Jersey,Massachusetts, Rhode Island,Connecticut, Delaware, Maryland

Columbia Aircraft, Inc.

Groton-New London Airport (GON)
175 Tower Avenue
Groton, Connecticut 06340
Tel. +1 (800) 575 50 01
Tel. +1 (860) 449 8999
Fax +1 (860) 449 9924

Contact: Ken Dono (1 617 834-5217)
kdono@columbiaaircraftsales.com
www.columbiaairservices.com

LATIN AMERICA

Brazil

Algar Aviation

Aeroporto de Uberlandia
Hangar Valter Garcia
CEP 38406-393 Uberlandia MG
Brazil
Tel. +55 34 9967 3524
Fax. +55 34 3212 0101

Contact: Luciano Cruz
Cellphone.+55 34 3292 66 80
Email: luciano@algaraviation.com.br
www.algaraviation.com.br

Mexico

JetMach

Aeropuerto Internacional del Norte
Carretera a Salinas Victoria KM 1.7
Apodaca, NL, Mexico CP 66660

Contact: Jorge Lopez
+52 (81) 1516 7489
Tel. +52 (81) 1133 9300
Email: jlopez@jetmach.com
Website: www.jetmach.com

Latin America, Except Brazil & Mexico

SOCATA North America, Inc.

Rui Almeida
Hollywood North Perry Airport (HWO)
7501 S. Airport Road
Pembroke Pines, FL 33023
Tel. +1 (954) 893 9579
Cel. +1 (954) 907 3391
Fax +1 (954) 964 0805

Contact: Rui Almeida
Email: r.almeida@socata.daher.com

EUROPE

DAHER-SOCATA

Aéroport de Tarbes-Lourdes-Pyrénées
65921 Tarbes Cedex 9, France

France & Southern Europe

Guillaume Montreau
Tel. +33 (0)5 62 41 76 92
Cel. +33 (0)6 07 38 05 07
Fax. +33 (0)5 62 41 71 40
Email: g.montreau@socata.daher.com

Northern & Eastern Europe - Russia

Mark Diaz
Tel. +33 (0)5 62 41 77 88
Cel. +33 (0)6 31 56 29 54
Fax. +33 (0)5 62 41 71 40
Email: m.diaz@socata.daher.com

UK & Ireland

Mark Diaz
Tel. + 33 (0)5 62 41 77 88
Cel. + 33 (0)6 31 56 29 54
Fax. + 33 (0)5 62 41 71 40
Email: m.diaz@socata.daher.com

TBM Area Sales Representative (ASR)

Aura Aviation

London Oxford Airport
Oxfordshire
United Kingdom OX51RA
Adrian Munday
Tel: +44 (0)1865 589850
Mob: +44 7599174184
Contact: amunday@auraaviation.com
www.auraaviation.com

Germany & Austria

Rheinland Air Service

Flughafenstrasse 31
D-41066 Moechengladbach
Frank Prochaska
Tel. +49(0)21619948122
Cel. +49(0)1782550246
Fax.+49(0)21619948422
Email: f.prochaska@ras.de
www.ras.de

AFRICA/ASIA/PACIFIC

South Africa & English spoken countries

Africa & Middle East countries

Guillaume Montreau
Tel. +33 (0)5 62 41 76 92
Cel. +33 (0)6 07 38 05 07
Fax. +33 (0)5 62 41 71 40
Email: g.montreau@socata.daher.com

China, India

Mark Diaz
Tel. +33 (0)5 62 41 77 88
Cel. +33 (0)6 31 56 29 54
Fax. +33 (0)5 62 41 71 40
Email: m.diaz@socata.daher.com

Australia, Indonesia, Malaysia, New Zealand, Singapore

Mark Diaz
Tel. +33 (0)5 62 41 77 88
Cel. +33 (0)6 31 56 29 54
Fax. +33 (0)5 62 41 71 40
Email: m.diaz@socata.daher.com

Australia

TBM Area Sales Representative (ASR)

Executive Airlines Pty Ltd

Matthew Anderson
Cnr Short St & Nomad Rd
Essendon Airport 3041Victoria
Australia
Tel. +61 (0)3 9374 1777
Cel. +61 (0)438 384 607
Fax. +61 (0)418 341 797
Email: m.anderson@executiveairlines.com.au
www.executiveairlines.com.au

TBM Area Sales Representative (ASR)

A&C Aviation Pty Ltd

Andrew Henderson
41 Lyndhurst Street
RICHMOND VIC 3121
Australia
Tel: +61 408 549 176
Email: Andrew@acaviation.com.au

Malaysia & Singapore

TBM Area Sales Representative (ASR)

Wings Over Asia Pte Ltd

Yeow Meng
WOA Global HQ Office & Club WOA Members Lounge
700 West Camp Road
#06-06 Business Aviation Complex
Singapore 797649
Tel +65 6659 6225
Mobile phone: +65 9686 3777
Website: www.wingsoverasia.com
Email: yeowmeng@wingsoverasia.com

Photo credit: *Association Héritage Avions Morane-Saulnier, Guy Brochot, Paul Brou, Laurent Crassous, Mike Fizer, Sylvain Gardères, Erik Hildebrandt, Thomas Jullien, MGA, Sébastien Ognier, Alexandre Paringaux, Craig Peyton, Hervé Piraud, SimCom, Dave Spurdens, Philippe Stroppa, Richard G. Winwood, Zéphyr Editions.*

All other pictures are ©DAHER-SOCATA with special thanks to Patrice Viau from the documentation department